TRACTOR

85

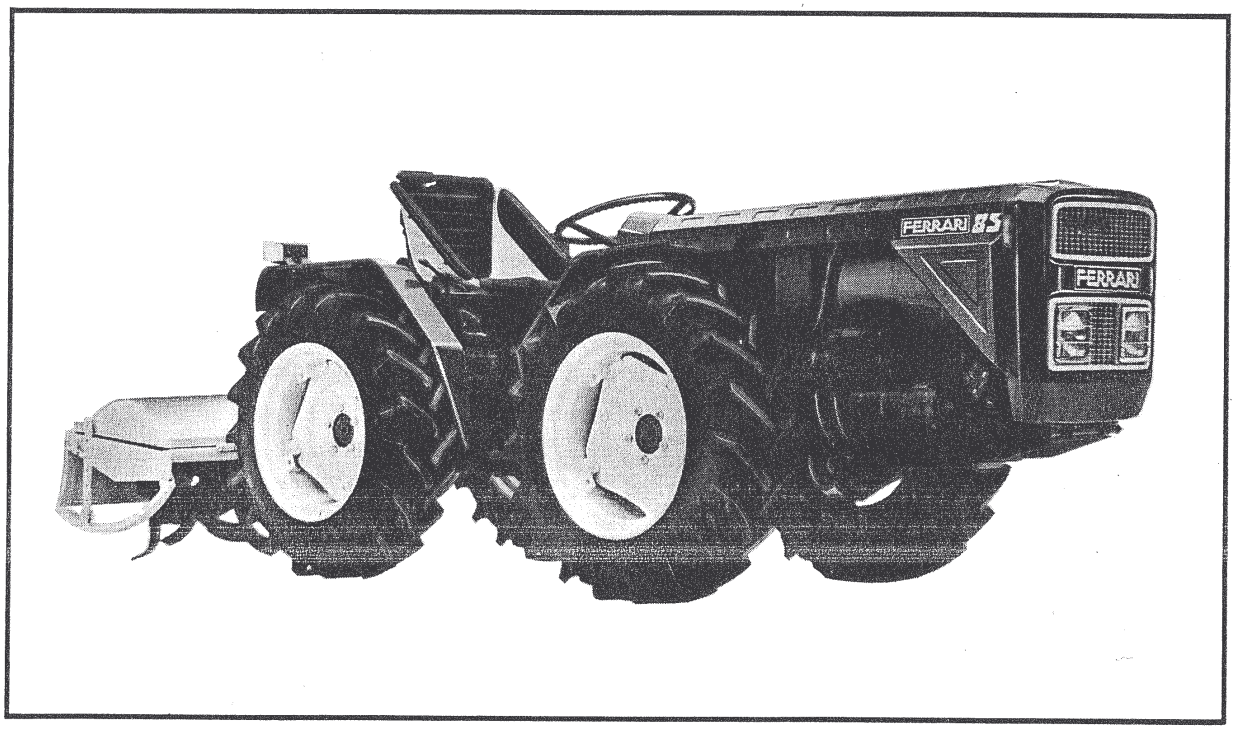

FERRARI

MACCHINE AGRICOLE

Downloaded from www.Manualslib.com manuals search engine

INTRODUCTION

IDENTIFICATION OF TRACTOR

The serial number of the machine is stamped on the right side of the gear box (fig. 1).
Always state the tractor serial number when placing any order for spare parts and asking for technical assistance.

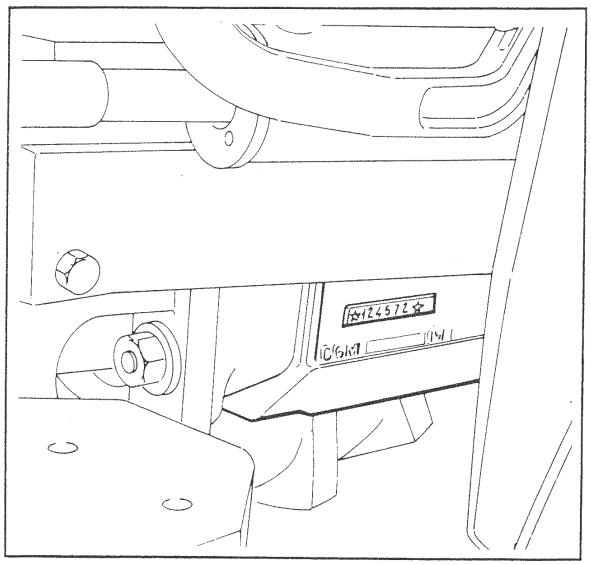

Figure 1. Identification of tractor

FOREWORD AND RECOMMENDATIONS

The following technical literature is delivered with each Ferrari tractor:

- OWNER'S MANUAL (operation and maintenance instructions)
- ENGINE HANDBOOK
- DIRECTIONS AND SUGGESTIONS FOR USERS OF FERRARI TRACTORS
- CERTIFICATE OF GUARANTEE

Reading the present manual for use and maintenance is essential to make full use of possibilities and performence of your Ferrari tractor.
As present manual refers to essential information only, it is strongly recommended for users going through handbook "DIRECTIONS AND SUGGESTIONS FOR USERS OF FERRARI TRACTORS".
You will find threin helpful suggestions for best efficiency and trouble-free operation be achieved.

SPARE PARTS

It is strongly recommended that only ORIGINAL REPLACEMENT PARTS should be used. Orders must be made in accordance with the instructions contained in the Spare Parts Catalogue.
If a copy of the spare parts catalogue is not at hand, contact a Ferrari's Authorized Representative.

TECHNICAL ASSISTANCE

FERRARI MACCHINE AGRICOLE place their Tecnical Assistance Service at Customer's disposal in order to solve any problem concerning use and maintenance of their machines.
CUSTOMERS may send their requests in writing to

O.M. FERRARI F. S.p.A.
Via Valbrina, 414
42045 LUZZARA (Reggio Emilia) - ITALIA
Tel. (0522) 835524 (5 linee)
Telex 530144 FERMAC

The Makers reserve the right to modify the machine for any requirement of a commercial constructional character without obligation to update this publication promptly.

Downloaded from www.Manualslib.com manuals search engine

CONTENTS

	Page
GUARANTEE	3
TRACTOR DATA SHEET	6
SERVICING	
Tyre inflation	9
Filling	9
CONTROLS AND INSTRUMENTS OF TRACTOR	
Controls and indicators on dashboard	11
Controls for drive and work operations	12
USE OF TRACTOR	
Running-in	13
Starting of engine	13
Stopping the engine	14
Use of tractor	14
Power take-off	15
Synchronization of upper power take-off	15
Implement power take-off (either upper or lower)	16
Front and rear differentials locking lever	16
Hydraulic implement lifter	17
Connection for implements	18
Towing hook	20
Track variation	21
MAINTENANCE	
Lubrication and inspections	23
Inspections and adjustments	26
Hydraulic system	27
HYDRAULIC SYSTEM	
System inspection	30
TROUBLE SHOOTING	
Hydraulic lifter	32
Hydraulic steering	34

Downloaded from www.Manualslib.com manuals search engine

TRACTOR DATA SHEET

OVERALL DIMENSIONS OF THE TRACTOR

(See figure 2)

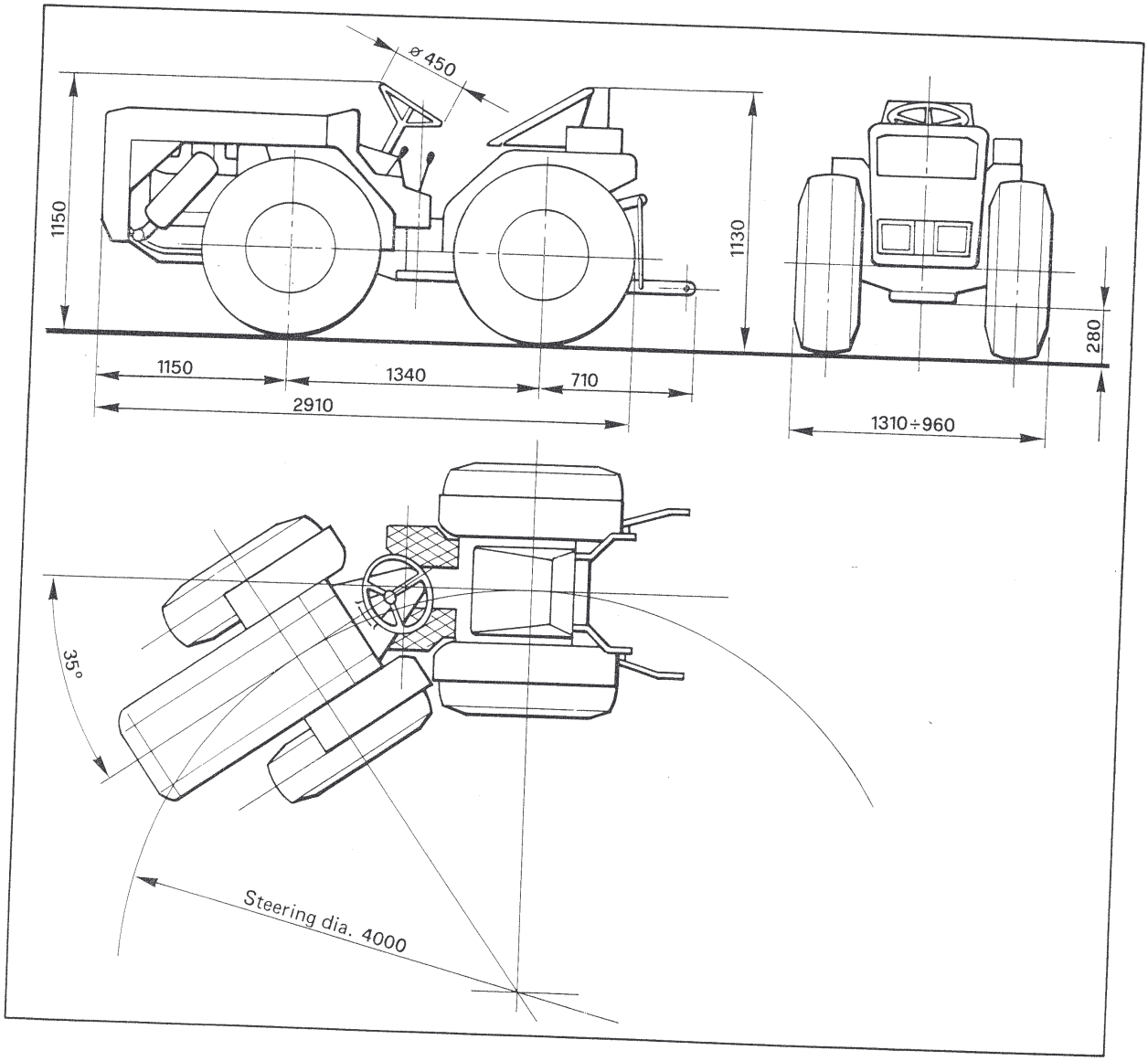

Figure 2. Overall dimensions in mm

ENGINE

The tractor is normally equipped with a Lombardini LDA 673 engine. Engine main specifications are the following:

Type: three-cylinder, four-stage, air cooled Diesel engine.

Maximum rate: 3000 rpm

Maximum power: 45 HP

Upon request different types of engine are available.

CLUTCH

Dry single-plate clutch
Upon request: large diameter double clutch controlled through a single pedal to disengage the wheel drive from the power take-off.

Downloaded from www.Manualslib.com manuals search engine

SPEED SELECTION

Speed selection is allowed through a range selector (HIGH, LOW, REVERSE) and three speed gearing. The gear-box is provided also of the 7th speed used for road movement operations.

SPEED km/h										
TYRE SIZE	FORWARD							REVERSE		
	LOW			HIGH						
	1	2	3	1	2	3	7	1	2	3
9.5-20	1,50	2,70	4,70	6,20	11,00	19,00	25,00	2,70	5,20	9,00

Note: with 7.50-18 tyres, the max. speeds decrease approx. 10%

DRIVE AND STEERING

Drive on the front and rear wheels through locking differentials. Hydraulic steering with jack acting on the central joint.

WHEELS AND TYRES

Front wheels: 9.5-20 tyres
Rear wheels: 9.5-20 tyres
Track variation is allowed on both axles
Tyres 7.50-18 are available on request.

TYRE SIZE	TYPE	INFLATING PRESSURE
Front 9.5-20	Tractor Agricolo 4 pr	1.4 to 1.5 kg/sq.cm
Rear 9.5-20	Tractor Agricolo 4 pr	1.3 to 1.4 kg/sq.cm
Front 7.50-18	Tractor Agricolo 4 pr	1.2 to 1.3 kg/sq.cm
Rear 7.50-18	Tractor Agricolo 4 pr	1.1 to 1.2 kg/sq.cm

BRAKES

Service brakes: hydraulic type on front and rear wheels. A pedal controls the special servocontrolled pump for simultaneous braking of all wheels.

Parking and emergency brakes: hand-lever controlled, mechanical design, acting on rear wheels.

ELECTRIC EQUIPMENT

Rated voltage 12 Volt
Battery capacity 90 Amph (two 45 Amph batteries are provided).
Batteries are recharged through alternator and voltage regulator.
Lighting system and horn are tested and approved for road circulation.

HYDRAULIC LIFTER

Independent hydraulic circuit.
Pump directly coupled to engine. Control valve ensuring an automatic adjustment of work depth and effort. Hydraulic jack for lifting. 2 or 3 point hitch connection. Allowable load at arms: 1000 kg approx.

POXER TAKE-OFF

The tractor is normally equipped with two rear power take-off:

- An upper power take-off providing two-speed range independent from tractor speed; a clutch makes it possible the synchronized rotation with all gearshift speed range.
- A lower power take-off providing two-speed range independent from the tractor (speed range is the same as the upper power take-off).

The two power take-off are standardized (coupling ASAE 1" 3/8). Dimensions are quoted in fig. 3.
Rotation is clockwise.

UPPER AND LOWER TAKE-OFF SPEED		
POSITION OF CONTROL LEVER	ENGINE RPM	
	2.400	3.000
I	540	670
II	750	940

TOWING HOOK

Adjustable in two positions. Class "B" approved for road circulation.
Dimensions are shown in fig. 3

TRACTOR WEIGHT

Weight of the tractor in running order is 1300 kg.
Allowed ballast 200 kg.

Downloaded from www.Manualslib.com manuals search engine

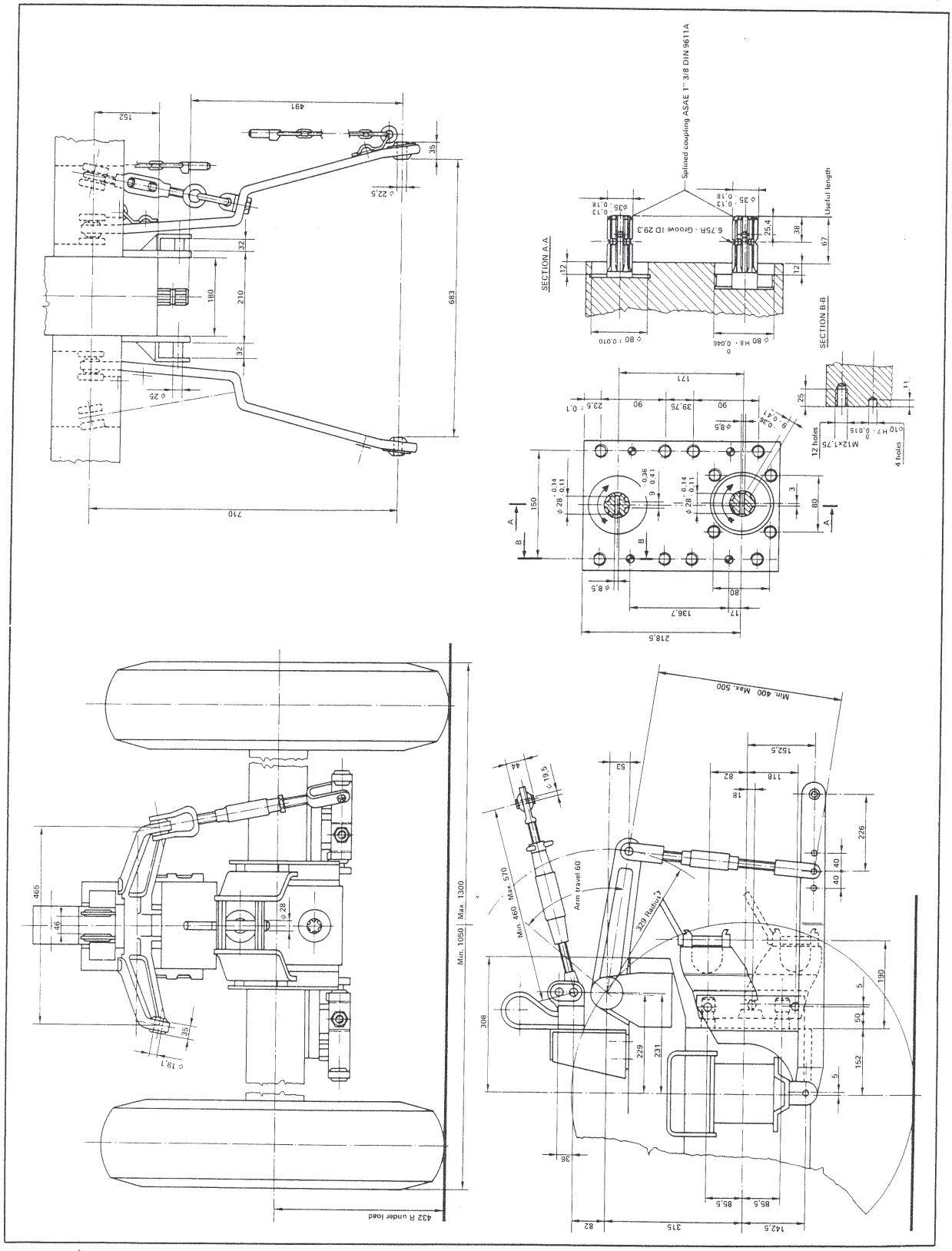

Figure 3. Dimensions of power take-off and towing hook

Downloaded from www.Manualslib.com manuals search engine

SERVICING

TYRE INFLATION

1. FRONT WHEELS	Tyres type Tractor Agricolo 4pr, 9.5-20; inflating pressure 1.4 to 1.5 kg/sq.cm
2. REAR WHEELS	Tyres type Tractor Agricolo 4 pr, 9.5-20; inflating pressure 1.3 to 1.4 kg/sq.cm

FILLING

1. FUEL TANK	Capacity 16 liters Use Diesel fuel (decanted fuel if possible)
2. ENGINE AND AIR FILTER	For lubricant types and capacity see engine handbook
3. GEAR BOX	Capacity 15 kg Use BP Energol GR-XP 220 (ISO), or oil AGIP F1 ROTRA HYPOID SAE 90
4. REAR AXLE HOUSING	Capacity 10 kg Use BP Energol GR-XP 220 (ISO) oil, or AGIP F1 ROTRA HYPOID SAE 90
5. HYDRAULIC SYSTEM	Capacity 7 kg Use BP Energol HL 68 oil or AGIP OSO 55 oil
6. TILLER HOUSING	Capacity 1.5 kg Use BP Energol GR-XP 220 ISO) oil, or AGIP F1 ROTRA HYPOID SAE 90
7. BRAKING SYSTEM RESERVOIR	Capacity 0.250 kg Use BP DISC BRAKE FLUID oil or AGIP BRAKE FLUID oil

Downloaded from www.Manualslib.com manuals search engine

CONTROLS AND INSTRUMENTS OF TRACTOR

CONTROLS AND INDICATORS ON DASHBOARD

(See figure 4).

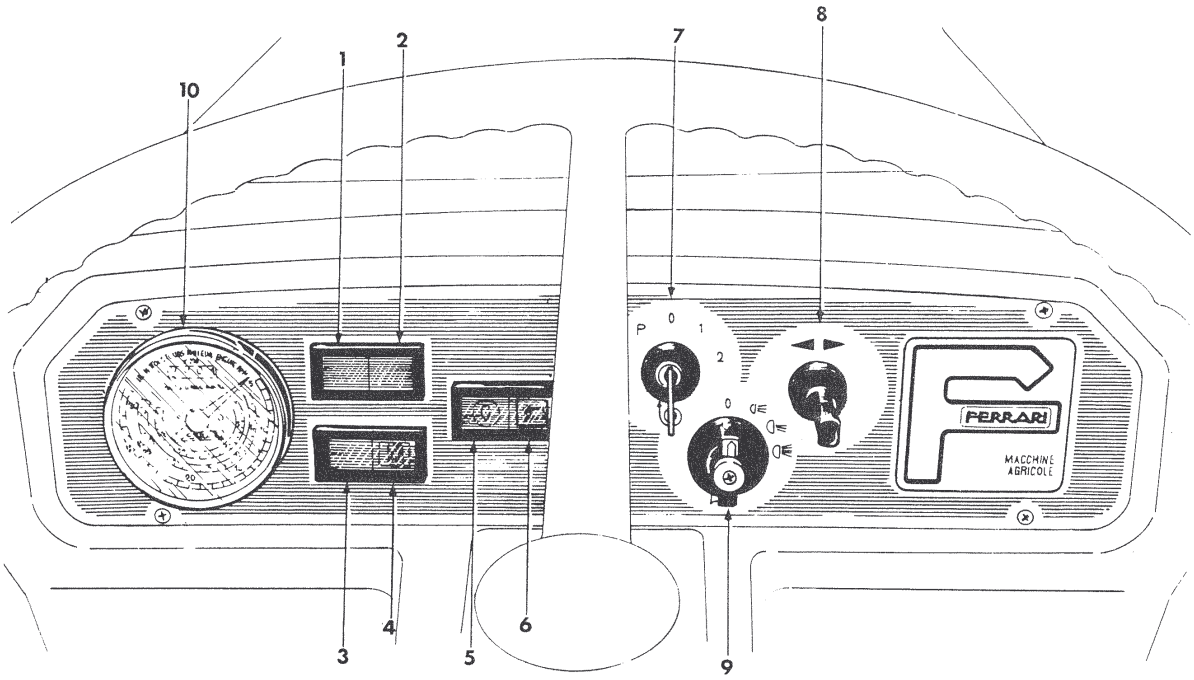

1. Signal of directional lights on (GREEN)
2. Signal of directional lights for trailers (GREEN)
3. Signal of headlights fully on (BLUE)
4. Signal of fuel reserve in use (RED)
5. Signal of poor feed for battery recharge (RED) (optional)
6. Signal of low oil pressure to engine (RED)
7. Key-switch:

   P. Lights circuit live
   0. No circuit live
   1. All circuits live
   2. Engine starting

8. Switch for directional lights and flashers
9. Switch for lights and horn
10. Multiple revolution-counter and hour-meter (3-scale instrument)
    - Outer scale reads engine rpm
    - Intermediate red scale reads power take-off rpm in 2nd speed. Whatever the equipment used, it is recommended to keep constantly at about 750 rpm (red reference notch)
    - Inside red scale reads power take-off rpm in 1st speed. Whatever the equipment used, it is recommended to keep constantly at about 550 rpm (red reference notch).
    - The four-digit hour-meter reads the actual hours of engine operation.

Figure 4. Controls and indicators on dashboard

Downloaded from www.Manualslib.com manuals search engine

CONTROLS FOR DRIVE AND WORK OPERATIONS

(See fig. 5)

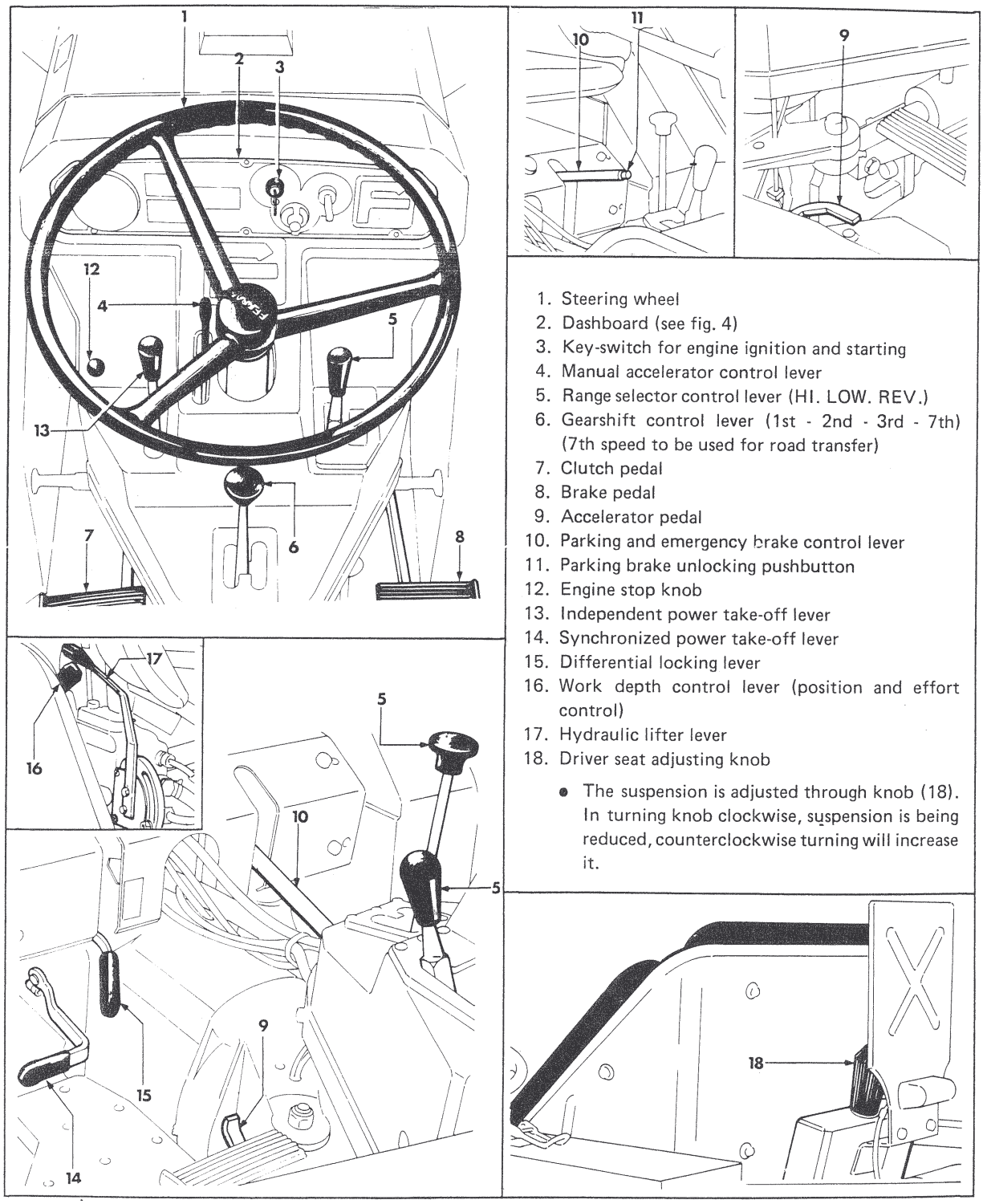

1. Steering wheel
2. Dashboard (see fig. 4)
3. Key-switch for engine ignition and starting
4. Manual accelerator control lever
5. Range selector control lever (HI. LOW. REV.)
6. Gearshift control lever (1st - 2nd - 3rd - 7th) (7th speed to be used for road transfer)
7. Clutch pedal
8. Brake pedal
9. Accelerator pedal
10. Parking and emergency brake control lever
11. Parking brake unlocking pushbutton
12. Engine stop knob
13. Independent power take-off lever
14. Synchronized power take-off lever
15. Differential locking lever
16. Work depth control lever (position and effort control)
17. Hydraulic lifter lever
18. Driver seat adjusting knob

- The suspension is adjusted through knob (18). In turning knob clockwise, suspension is being reduced, counterclockwise turning will increase it.

Figure 5. Controls for drive and work operations

Downloaded from www.Manualslib.com manuals search engine

USE OF TRACTOR

RUNNING-IN

During the running-in period (first 80 hours of operation) special care should be taken (consult the handbook "Direction and Suggestions for Users" for detailed information).

During and upon completion of running-in the operations described under fig. 6 are to be carried out.

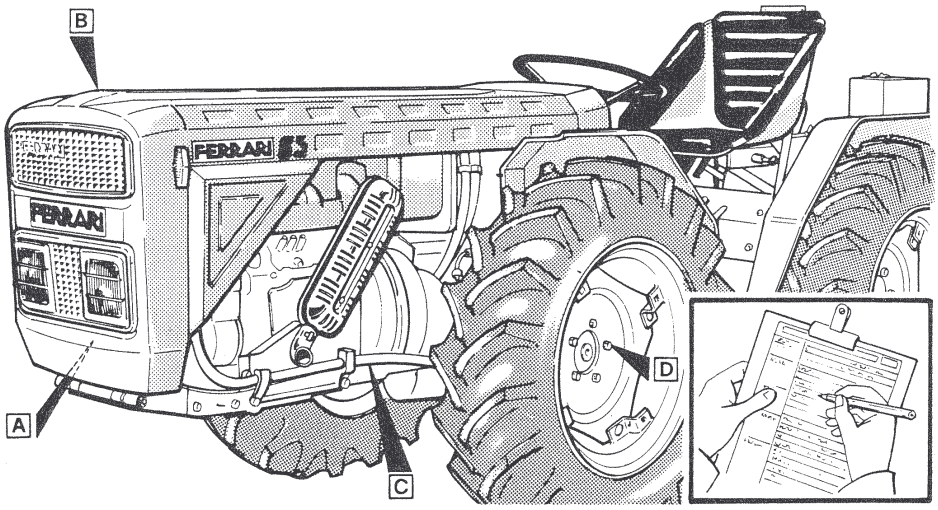

A ENGINE

After 20 hours: change oil
After 50 hours: clean and set fuel injectors

* **During the first 80 hours:** avoid heavy-duty and extended work.

B AIR FILTER

After 20 hours: clean the filter element
After 80 hours: change oil

C HYDRAULIC SYSTEM

During the first 80 hours: inspect frequently; if required take action for adjustment as prescribed (see page 30).

After 80 hours: change oil (BP ENERGOL HL 100 or AGIP OSO 55)

D MAIN UNITS

During the first 80 hours: inspect all main units (engine, gear box, drive system, attachments, control linkage, etc.) for security of attachment frequently.

* **For detailed instructions consult "Directions and Suggestions for Users"**

Figure 6. Instructions for running-in

STARTING OF ENGINE

- For additional information about engine operation, refer to the appropriate instruction booklet (owner's manual).
- For normal starting, proceed as follows (see figure 7).

1. Make sure that the engine stop knob is fully pushed in.
2. Make sure that all control levers (2) are in NEUTRAL position.
3. Bring accelerator control lever (3) to half-way position.
4. Insert key in switch (4) and turn it to position "2".
5. When motor is started, release key which will revert direct to position "1".

Note

In case of failure to start, wait a few seconds prior to doing the starting sequence again, not to cause battery running down.

Downloaded from www.Manualslib.com manuals search engine

Consult the engine handbook for additional information.

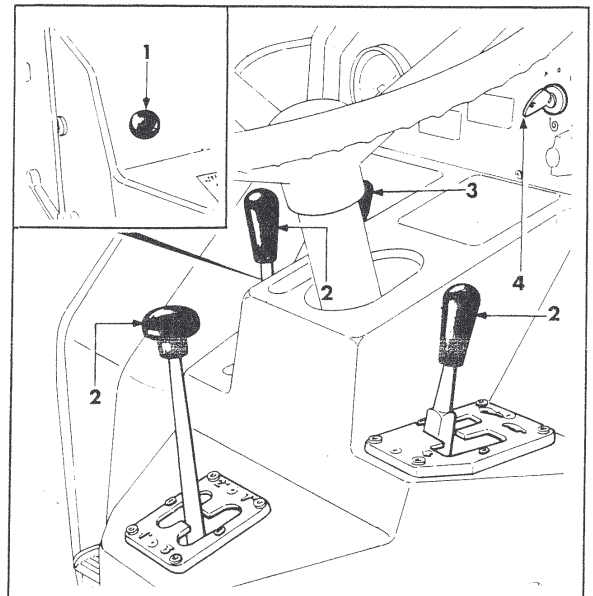

1. Engine stop knob
2. Control levers
3. Accelerator control lever
4. Key-switch

Figure 7. Controls for starting the engine

STOPPING THE ENGINE

1. Bring all control levers to NEUTRAL position.
2. Before turning off the engine, let it run for a few minutes at low RPM to make cooling easier (this is most advisable after a long running).
3. Pull engine stop knob (fig. 7, detail 1).

WARNING

Do no try stopping the engine by bringing switch-key to position "0" because the engine would keep on running. Long operation of engine with power off may adeversely affect the battery.

4. Remove key from switch.
5. After the engine stops, fully push the stop knob (1), otherwise the engine will not start next time.

USE OF TRACTOR

OPERATION SEQUENCE

1. Press clutch pedal (fig. 8, detail 1).

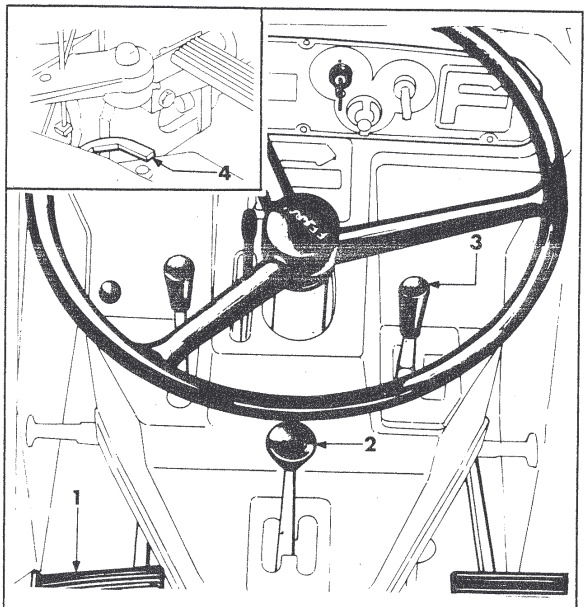

1. Clutch pedal
2. Gearshift control lever
3. Range selector lever
4. Accelerator pedal

Figure 8. Operation sequence

2. Select the desired speed range (Low, Hi, Reverse) through lever (3).
3. Select the desired speed gear (1st - 2nd or 3rd) through lever (2).
4. Gradually release the clutch lever.
5. Regulate the position of the accelerator hand-lever so that the engine runs evenly and without exhaust smoke.
6. For all subsequent operations and manoeuvers, use the accelerator pedal only.

WARNING

- In the event any resistance be encountered when engaging the desired gear or selector particularly during running-in, always depress

Downloaded from www.Manualslib.com manuals search engine

the clutch pedal over and over again. DO NOT FORCE LEVERS AND ALWAYS MAKE USE OF CLUTCH.

- The selector control lever is to be engaged WHEN TRACTOR IS AT STOP only.

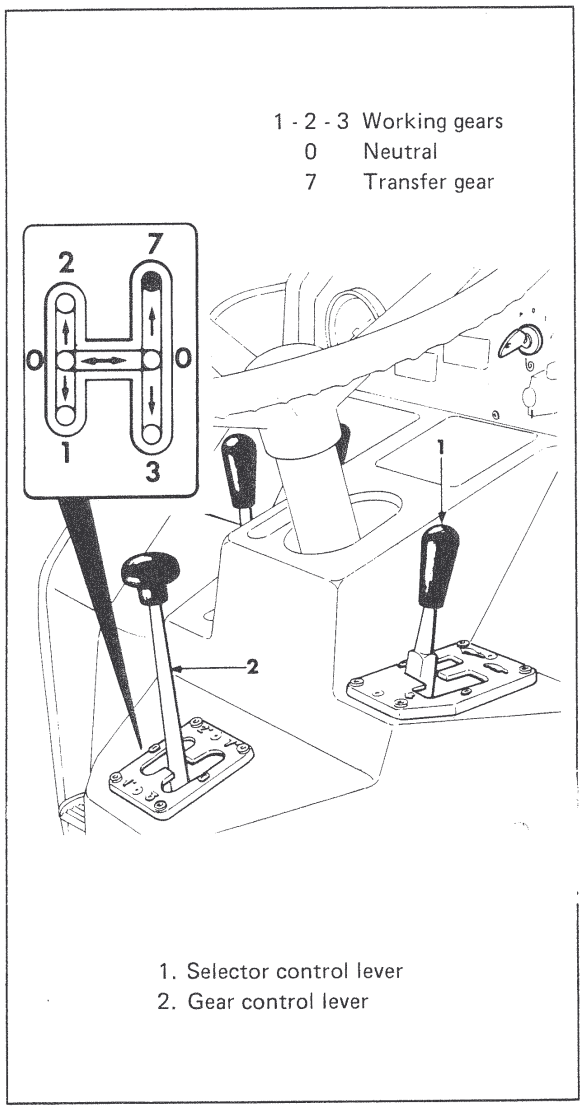

Figure 9. Use of 7th speed

USE OF 7th SPEED (See figure 9)

Whatever the speed previously engaged in the range selector (HI, LOW-REV), it is bypassed by engagement of the lever in the 7th gear-box position. This position makes the tractor proceed forward only, at maximum speed and hence is used for fast road movement operations.

WARNING

If the gearshift lever is brought back from the 7th speed to any other gear-box speed, the range selector automatically comes into operation again.
Therefore for example, shifting from the 7th speed to the 3rd speed, if the range selector was in the reverse position, the tractor will switch from a speed of about 25 km/h forward to a speed of about 9 km/h in reverse.
Thus, before shifting from 7th speed to others, it is ESSENTIAL TO CHECK THE SPEED ENGAGED IN THE RANGE SELECTOR BY OBSERVING THE POSITION OF THE POINTER. It is recommended as well to keep the range selector lever in the "NEUTRAL" position when shifting to 7th speed.
The manufacturer is not responsible for any damage caused to operator, tractor or third parties due to improper use of the range selector and gearshift levers.

POWER TAKE-OFF

The tractor is equipped with two power take-off (see fig. 10).

- Lower power take-off providing two independent speeds for operating miscellaneous implements.
- Upper power take-off providing two independent speeds as the lower shaft speed rates and additional provisions for synchronization of speeds with the entire gearshift range.

All specifications relating to power take-off (dimensions, rotation speed etc.) are stated under "TRACTOR DATA SHEET" and fig. 3.

SYNCHRONIZATION OF UPPER POWER TAKE-OFF

The synchronized power take-off is driven by the bevel pinion of the rear axle when the relating control lever is engaged (fig. 10, detail 3).
When tractor is at stop, power take-off does not rotate; switching from forward movement to reverse, rotation direction of the power take-off is reversed as well.
Whatever the speed engaged, synchronized power take-off performs 5.286 revolutions per revolution of the wheels.

Downloaded from www.Manualslib.com manuals search engine

The synchronized power take-off essential scope is towing driving-wheel trailers. The trailer tyre sizes and reduction ratios must be selected on the basis of the number of revolutions made by the power take-off.

POWER TAKE-OFF SYNCHRONIZER CONTROL LEVER

The control lever is located on right hand side of the rear axle box (see fig. 10).
Control lever to be actuated as follows:

1. Depress clutch pedal.
2. To have power take-off engaged, push lever (1) DOWN.
3. To have it released, pull lever (1) UP.

IMPLEMENTS POWER TAKE-OFF

(EITHER UPPER OR LOWER)

OPERATING SEQUENCE

1. Depress clutch pedal.
2. Engage power take-off in the desired speed by bringing the proper lever (fig. 10) to position I (Low speed) or to II (High speed).

CAUTION

Make sure the control lever is properly engaged.

3. Gradually release clutch pedal.

FRONT AND REAR DIFFERENTIALS LOCKING LEVER

The proper control lever to be actuated as follows (see fig. 11):

1. For LOCKING the differentials, stop tractor and pull control lever (1) UP beyond the detent (2).
2. TO UNLOCK the differentials, release the control lever (1) from the detent (2) and take it DOWN.

WARNING

- When engaging the differentials locking lever, slightly steer the tractor to right hand and left hand to make locking engagement easier.

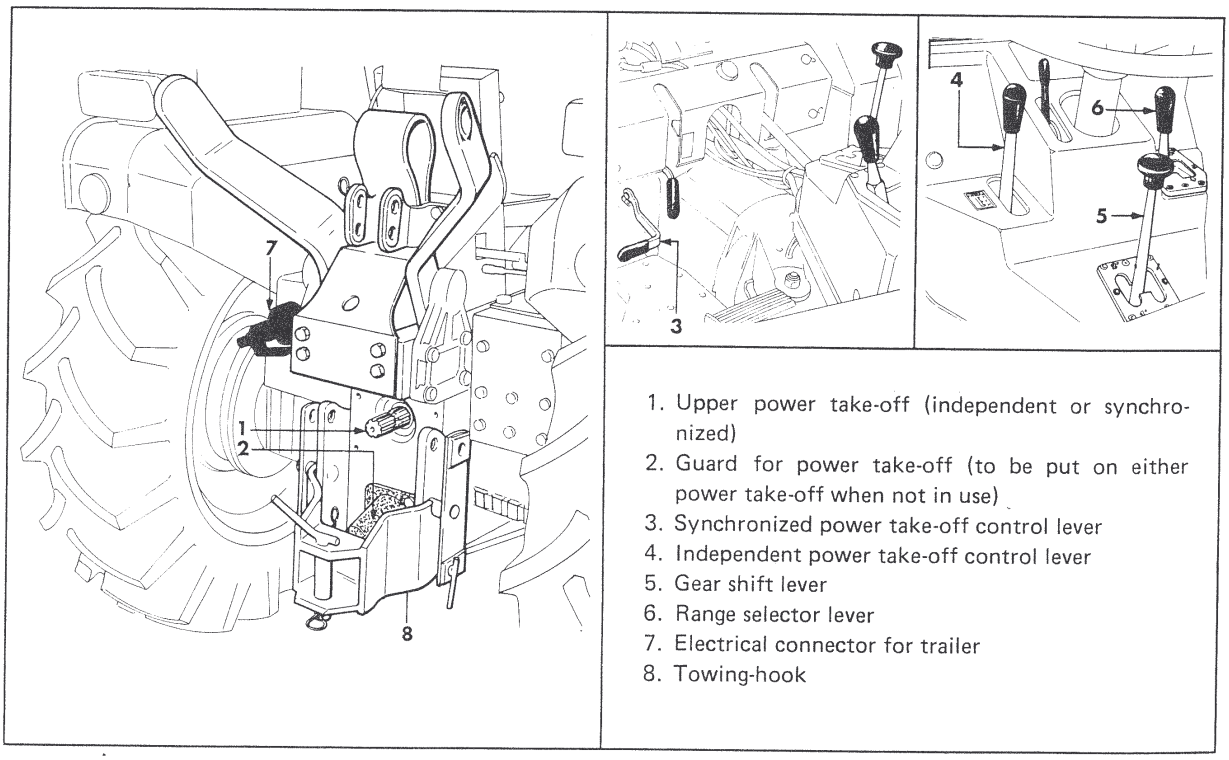

1. Upper power take-off (independent or synchronized)
2. Guard for power take-off (to be put on either power take-off when not in use)
3. Synchronized power take-off control lever
4. Independent power take-off control lever
5. Gear shift lever
6. Range selector lever
7. Electrical connector for trailer
8. Towing-hook

Figure 10. Power take-off and controls

Downloaded from www.Manualslib.com manuals search engine

- DO NOT ENGAGE differentials locking when tractor is under stress.
- TO DISENGAGE locking, depress clutch pedal to unload the wheels thereby allowing the locking sleeves to disengage.
- Do not go round bends with the differential locked.
- Do not keep the differential locked when unnecessary.

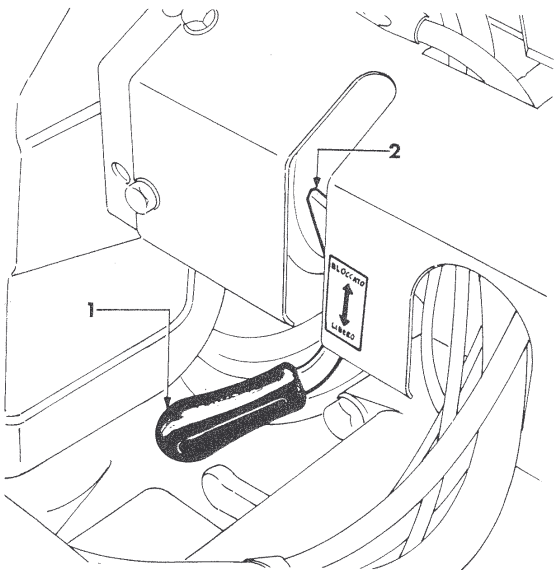

1. Differential locking control lever.
2. Upper detent (lever in "LOCKED" position)

Figure 11. Locking of differentials

HYDRAULIC IMPLEMENT LIFTER

The hydraulic lifters mounted on "FERRARI 85" tractors may be used as described hereinafter:

1. "Stationary" position.
2. Floating operation.
3. Controlled position and effort.

HYDRAULIC LIFTER LEVER

The control lever acts as follows (see fig. 12):

1. LEVER UP: the implement holder raises.
2. LEVER DOWN: the implement holder lowers.
3. LEVER FULLY DOWN: the implement holder gets "floating".

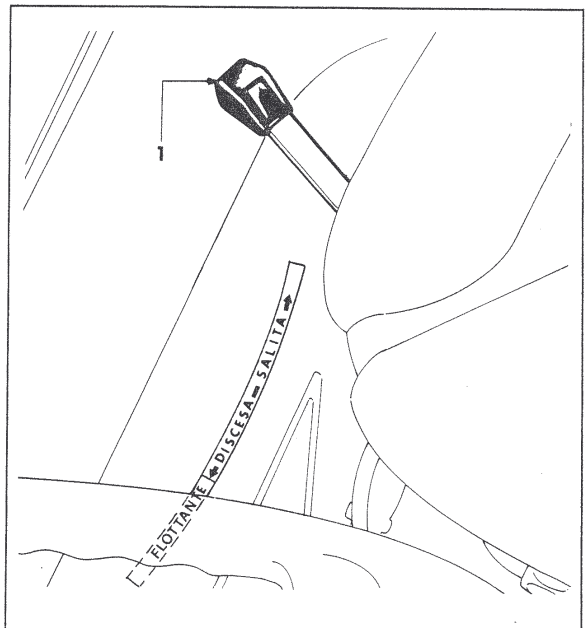

1. Hydraulic lifter control lever

Figure 12. Control system of implement holder hydraulic lifter

"STATIONARY" OR "FLOATING" POSITION

Note

Make sure the controlled effort lever (fig. 13, item 1) is disengaged (position 10 of graduated scale).

"STATIONARY" USE

"Stationary" position makes it possible to lead and hold the implement in any position inside or outside the ground according to the position selected with the lifter lever (fig. 12, item 1). Implement movement depends upon lever motion.

Downloaded from www.Manualslib.com manuals search engine

"FLOATING" USE

"Floating" use releases completely the lifter arms, motion of which gets free. In this instance, the lifter is used only to lower the implement at the beginning of each stroke and, during work, the implement follows the ground surface.

CONTROLLED EFFORT LEVER

The controlled effort lever makes it possible adjusting the hydraulic lifter sensitivity as follows (see fig. 13):

1. LEVER AHEAD (to number "10" of graduated scale); the implement acts with full power and is less sensitive when resistance is encountered.

2. LEVER BACK (to number "0" of graduated scale): the implement gets more sensitive and tends to raise when resistance is encountered.

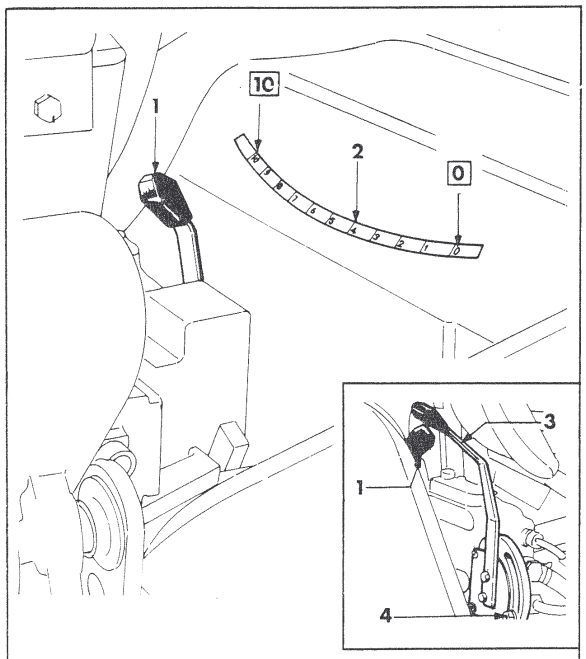

1. Controlled effort lever
2. Effort graduated scale
3. Hydraulic lifter control lever
4. Adjustable device for stopping lifter lever

Figure 13. Use of the controlled effort hydraulic lifter

Note

The controlled effort lever can be used only in conjunction with the 3-point hitch.

APPLICATION OF CONTROLLED EFFORT

The controlled effort provision is particularly designed for all carried implements (viz no-wheel and no-bearing geared units) which should work in even deep soil.
work in even deep soil.
With an appropriate setting of the effort control lever, the implement height varies according to the resistance offered by the soil. The tractor runs more smoothly and the speed is almost constant.
Operate the controls as follows (see fig. 13).

1. Lower the implement by gradually bringing the lifter control lever to "DOWN" position.
2. Keep actuating the lever until the implement gets steady in required depth.

   Lock the lever stop (4) to bring it to same position in starting any stroke.
3. Adjust the lifter sensitivity actuating lever (1) as shown in figure 13.

CONNECTION FOR IMPLEMENTS

The tractor is equipped with a two or three point hitch. Consult booklet "DIRECTIONS AND SUGGESTIONS FOR USERS" for instructions concerning connection provisions.

CONNECTION OF A TILLER
(see fig. 11)

Connect the tiller joint (1) to the tractor implement holder by means of pins (2). Connect the tiller arms (3) to joint (1) by means of the appropriate pins (4). Connect tiller attachments to lifter arm (6) through the appropriate tie-bars (5). Adjust the position of the implement with the adjustment nuts (7). The working depth of tiller is controlled according to requirements in moving the side slides of tiller. This is done removing screw (8) and placing it into another hole. Make same adjustment on both sides of the tiller.
Connect universla joint (9) to the power take-off shaft. Depress the safety button (10) and make sure the joint goes beyond the catch. Then insert the clutch end of universal shaft provided with a safety button (10) onto the tiller shaft, and bring the universal shaft (tractor side) back to catch position.

Downloaded from www.Manualslib.com manuals search engine

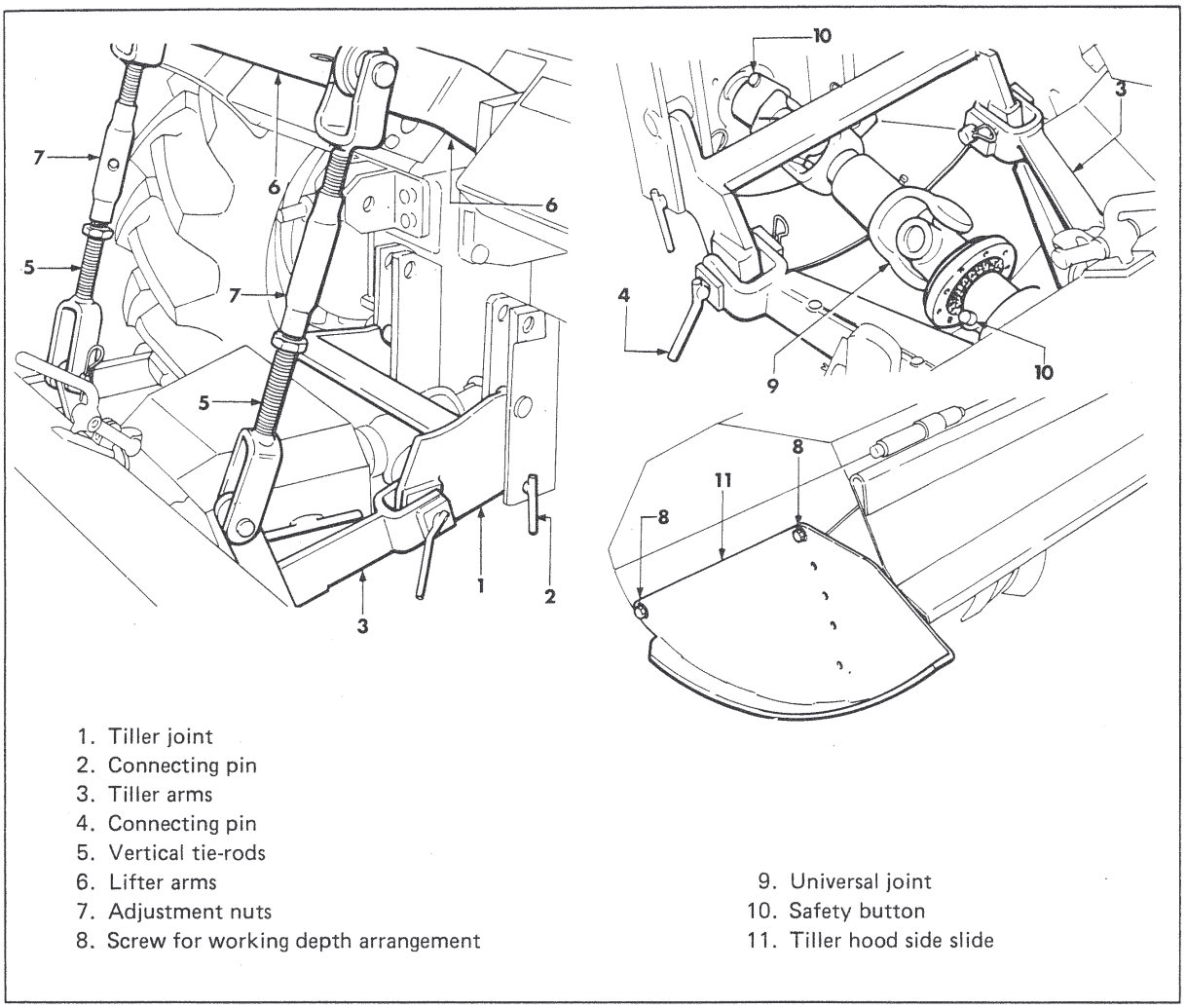

1. Tiller joint
2. Connecting pin
3. Tiller arms
4. Connecting pin
5. Vertical tie-rods
6. Lifter arms
7. Adjustment nuts
8. Screw for working depth arrangement
9. Universal joint
10. Safety button
11. Tiller hood side slide

Figure 14. Tiller connection

PLOUGH CONNECTION

(see fig. 15)

1. Connect arms (1) to tractor flanges located in the lower portion of rear hubs and fasten through appropriate pins.
2. Connect stiffening tie-bars (2) to arms (1) and flanges located on the axle shaft supports of rear wheels.
3. Connect sprag (3) to tractor implement holder through appropriate pins (4).
4. Connect plough to arms (1) and sprag (3) locking it through pins (5).
5. Connect plough to lifter arms through vertical tie-bars (6).
6. Adjust the length of the two lifting tie-bars so that plough lifting is limited to a strictly essential level only.

CONNECTION FOR DRIVING-WHEEL TRAILERS

1. Connect the trailer universal joint to the synchronized power take-off shaft (upper shaft).
2. Engage the parking brake lever of trailer into the corresponding socket.
3. Connect the tractor electrical system to the trailer through a 7-pole connector (fig. 15, item 12).
4. Engage the synchronized power take-off control lever as described and shown (see fig. 10).
5. If the trailer is a dump body model provided with hydraulic hoist, arrange connection of tractor hydraulic system to trailer body equipment through the appropriate quick hydraulic intake (fig. 16, item 5) fitted on the tractor (optional).

Downloaded from www.Manualslib.com manuals search engine

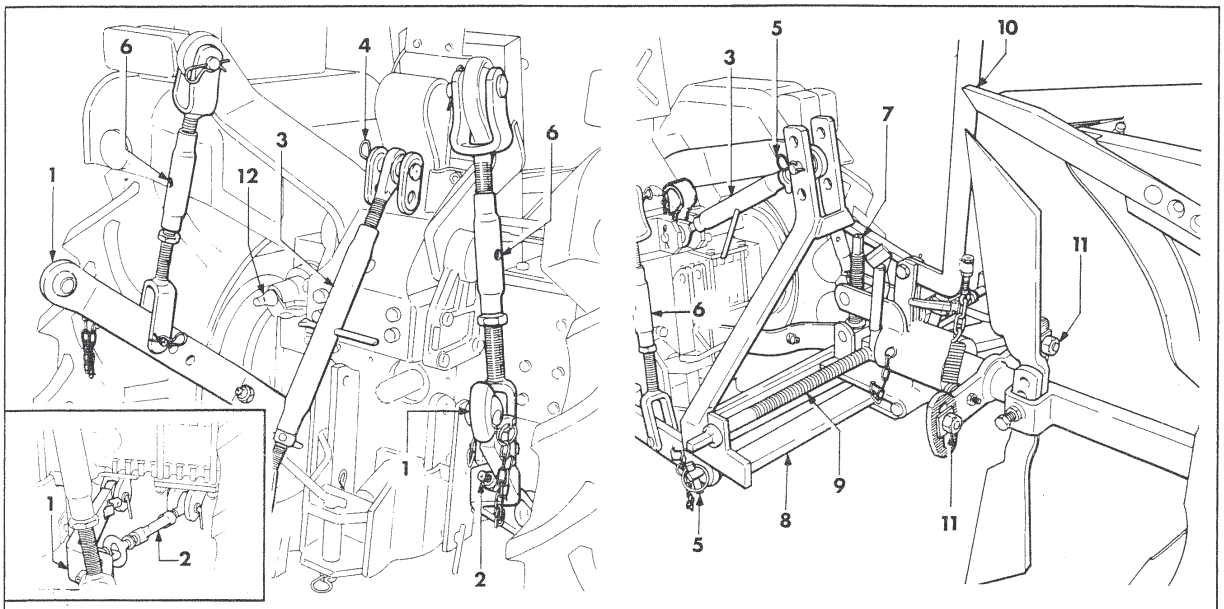

1. Thee-point hitch arms
2. Stiffening tie-bars
3. Sprag
4. Connecting pins
5. Connecting pins
6. Vertical tie-bars
7. Depth adjusting screw
8. Slide
9. Traverse adjusting screw
10. Slope adjusting lever
11. Fastening nut
12. Seven-pole connector

Figure 15. Plough connection

LIFTING OF TRAILER BODY

For body lifting follow procedure outlined (see fig. 16):

1. Actuate the hydraulic lifter control lever until arms (2) are fully raised.

2. Make sure the controlled effort lever (3) is in "0" position of the graduated scale.

3. Lift the dump body of trailer by pushing FORWARD lever (4) of the control valve.

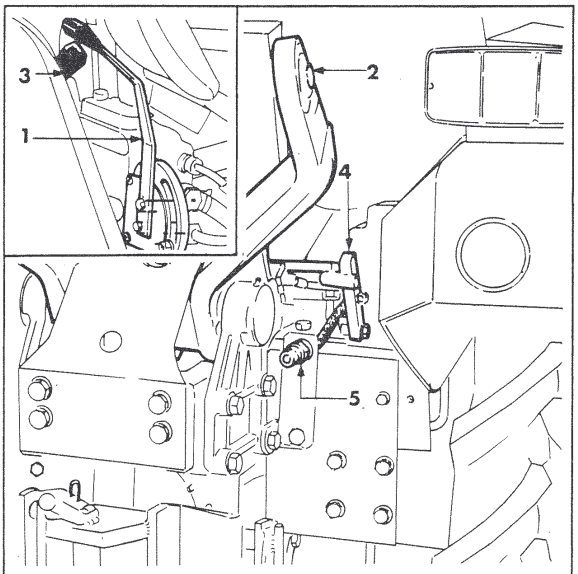

1. Implement holder lifter lever
2. Lifter arms
3. Lever for controlled effort adjustment
4. Trailer body lifting lever
5. Quick hydraulic intake

Figure 16. Hydraulic lifting of trailer body

TOWING HOOK

The tractor is provided with a road towing hook. See fig. 3 for hook dimensions.
The towing hook can be located either under or above the power take-off (location shown in fig. 10).

Downloaded from www.Manualslib.com manuals search engine

TRACK VARIATION

GENERAL

To meet the working requirements of the various implements and cultivations, all tractor models provide track variation.

ADJUSTMENT OF FRONT AND REAR TRACKS

The discs of rear and front wheels are adjustable. Position of wheels and relating tracks appears in fig. 17.

To dismantle wheels and discs, lift the tractor rear or front portion by means of a jack placed beneath the tractor body.

Note

In arranging for adjustment of front and rear tracks, make sure the tyre rib tip be positioned in the forward movement rotation direction (showh by an arrow on tyre side).
Front and rear wheels should be constantly symmetrical about the tractor longitudinal axis.

SECTION VIEW OF FRONT AND REAR WHEELS

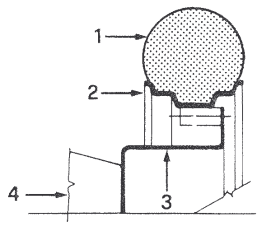

1. Tyre
2. Rim
3. Adjustable disc
4. Wheel hub

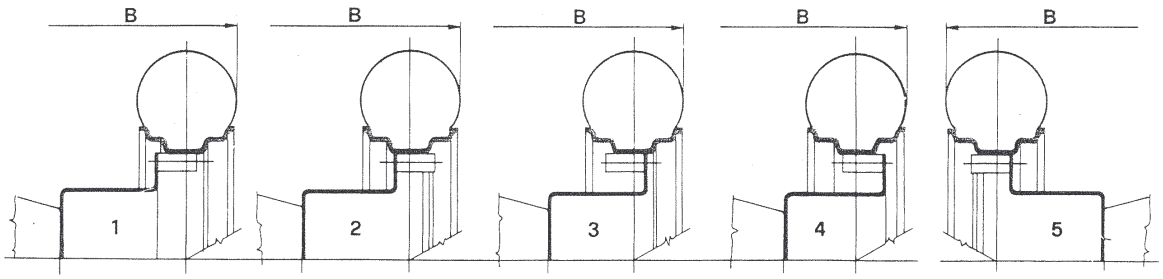

POSITION		1	2	3	4	5
Tyre 9.5-20	B	1300 mm	1170 mm	1185 mm	–	1050 mm
Tyre 7.50-18	B	1310 mm	1140 mm	1130 mm	960 mm	–

Figure 17. Variation of front and rear tracks

Downloaded from www.Manualslib.com manuals search engine

MAINTENANCE

LUBRICATION AND INSPECTIONS

Make prescribed operations as listed hereinafter at the intervals stated ("hours" are intended to be the actual working hours of the machine).
Lubricants to be used are quoted in table "SERVICING INSTRUCTIONS" at the beginning of present manual.

EVERY 8 HOURS (DAILY)

ENGINE: check oil level (when required, top it up).

AIR FILTER: under exceptional dusty conditions, the filtering element should be cleaned. Procedure to be as follows:

- release clips or collar (1) and remove cup (2);
- clean the filtering element (3) by means of gasoline or solvent. If the filtering screen is clogged or damaged, replacement will be necessary;
- clean cup (2) with gasoline and fill it with clean oil (same oil as for engine) up to level (4);
- where a "cyclon" filter is installed, clean precleaner with gasoline or solvent.

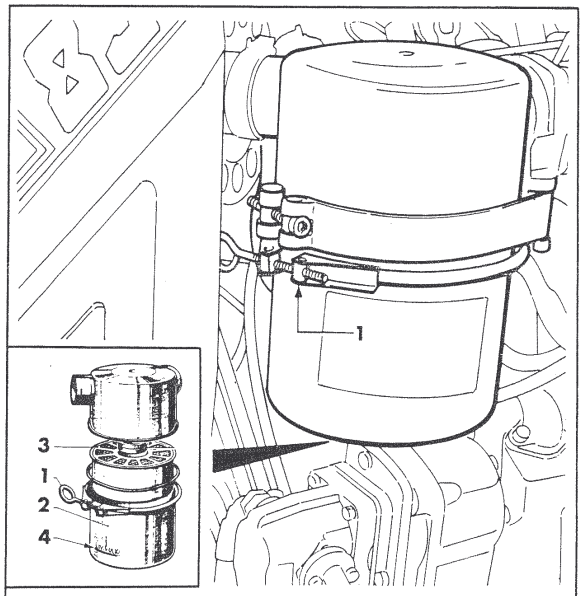

1. Clip or collar
2. Cup
3. Filtering element
4. Oil level

Figure 18. Engine air filter

POINTS TO BE GREASED (EVERY 25 HOURS)

CENTER PLATE: grease 1 point.

STEERING JACK JOINT: grease 2 points.

HYDRAULIC LIFTER ARMS: grease 2 points.

UNIVERSAL JOINTS: grease 4 points.

PIVOTS OF GEARSHIFT LEVER, SELECTOR LEVER, POWER TAKE-OFF LEVER: grease 3 points.

PIVOTS OF BRAKE AND CLUTCH CONTROL PEDALS: grease 2 points.

EVERY 60 HOURS (MAXIMUM INTERVAL)

AIR FILTER: cartridge should be cleaned in complying with the foregoing and oil be changed. Intervals for cleaning depend upon ambient conditions. However, never exceed 60 hours.

EVERY 100 HOURS

ENGINE: change oil.
HYDRAULIC SYSTEM RESERVOIR: check the level. With implement holder and steering control jacks fully drawn back, oil level should be at approx. 20 mm from reservoir edge (see fig. 19).

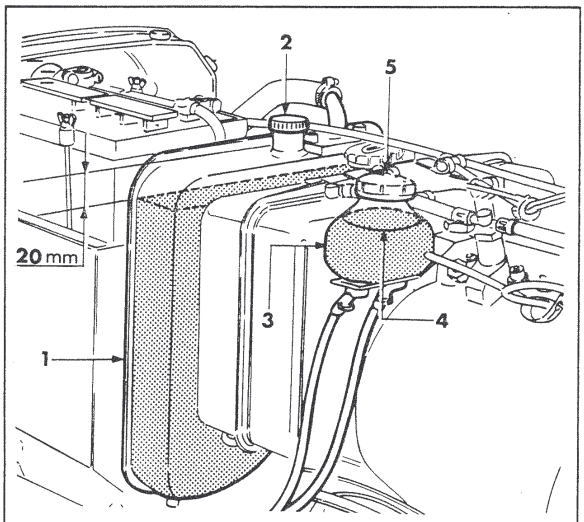

1. Hydraulic oil reservoir
2. Hydraulic oil filling plug
3. Brakes system oil reservoir
4. Brakes system oil level
5. Filling plug

Figure 19. Oil level of hydraulic system and brake system reservoirs

Downloaded from www.Manualslib.com manuals search engine

GEARBOX: check oil level (see fig. 20).
REAR AXLE BOX: check oil level (see fig. 21).
BRAKES SYSTEM RESERVOIR: check oil level (see fig. 19).

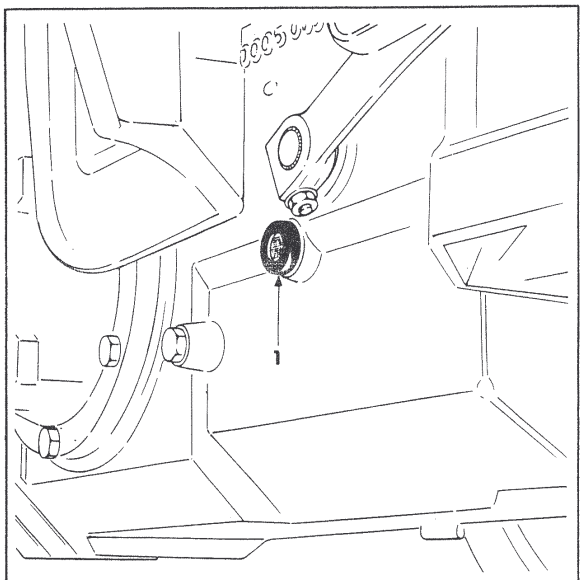

1. Oil level peep-hole

Figure 20. Oil level of gearbox

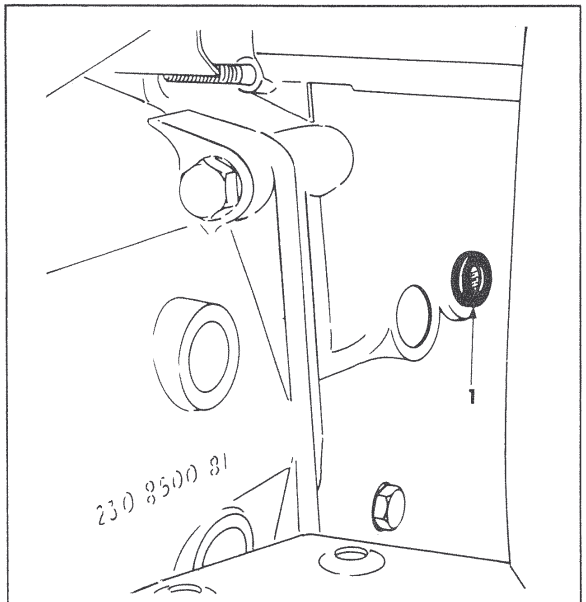

1. Oil level peep-hole

Figure 21. Oil level of rear axle box

EVERY 200 HOURS

FUEL SYSTEM: clean the filtering element, in following procedure outlined (see fig. 22):

- disjoin the outlet tube fitting;
- unloose bolt (1), remove cup (2) and filtering cartridge (3);
- clean filtering element (3) with gasoline or solvent ahd replace it if screen is found to be clogged or damaged;
- clean cup (2) with gasoline or Diesel fuel;
- re-assemble filtering element (3) in making sure seal (4) be in order and accurately located in groove.

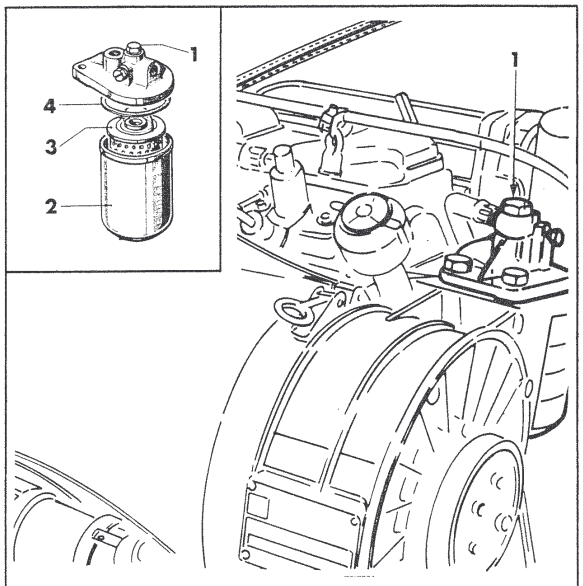

1. Fastening bolt
2. Cup
3. Filtering element
4. Seal

Figure 22. Fuel filter

HYDRAULIC SYSTEM: replace filtering cartridge of hydraulic system reservoir. Operating sequence (see fig. 23):

- remove flange (1) and filter unloosing screws (2);
- screw off filtering cartridge (3) from flange (1);
- screw down the new cartridge onto the flange. Reinstall the flange and fasten it through screws (2).

BRAKES: verify efficiency of service brakes and parking brake. If necessary take action for controls in following procedure outlined later in this booklet.

Downloaded from www.Manualslib.com manuals search engine

CLUTCH: verify efficiency of control system. If necessary take action for adjustment in following procedure outlined later in this booklet.

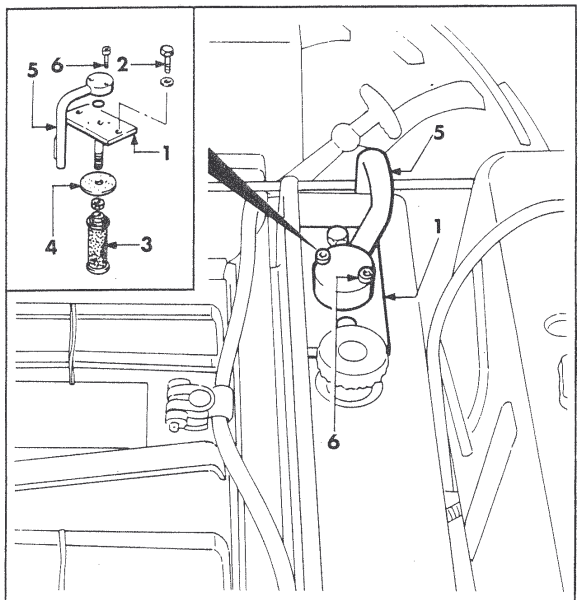

1. Flange
2. Fastening screws
3. Filtering element
4. Seal
5. Return piping of hydraulic oil
6. Fastening screws

Figure 23. Adjustment of the differential locking control

EVERY 500 HOURS

HYDRAULIC SYSTEM: change oil (see fig. 19).
GEARBOX: change oil (see fig. 24).
REAR AXLE BOX: change oil (see fig. 25).

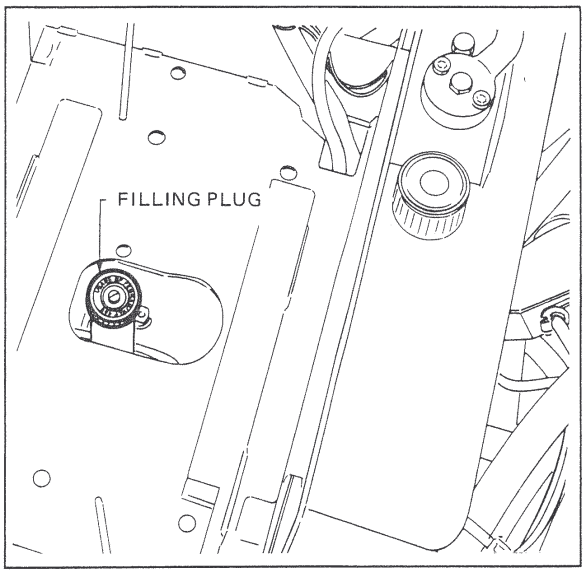

Figure 24. Oil filling plug for gearbox

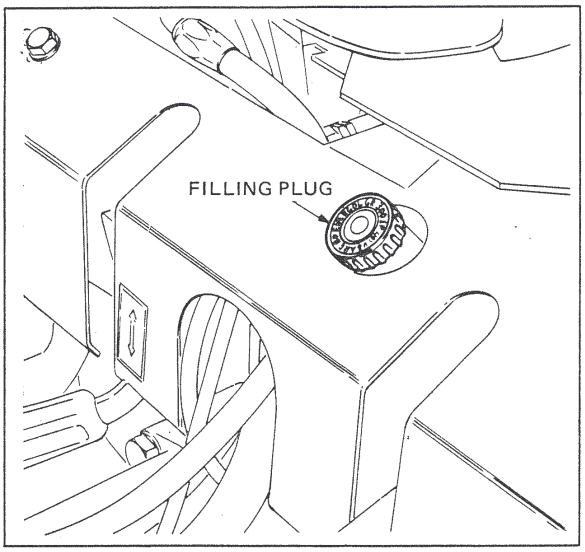

Figure 25. Oil filling plug for rear axle box

Downloaded from www.Manualslib.com manuals search engine

INSPECTIONS AND ADJUSTMENTS (GENERAL)

Information and specifications given here below refer to adjustment operation to be carried out on "Ferrari 85" tractors exclusively.
Direction for any overhaul and repairs are contained in a purpose-issued publication.

BRAKES

Service brakes

1. SYSTEM INSPECTION: if the braking action is found to be delayed, bleed the system through bleed valves located on the brakes cylinders (fig. 26, item 2). When bleeding is complete top off oil level in reservoir by adding new oil.

WARNING

To bleed air from the braking system, disjoin pipe (5) from the pump fitting and have air exhausted in the rear circuit, connect pipe (5) again and take action for bleeding the front circuit.

2. BRAKES ADJUSTMENT: if the idle stroke of pedals is found to be excessive, adjust the brake shoes as follows (see fig. 26):
   - turn screw (3) to cause internal cams to get in touch with jaws;
   - verify the brake pedal stroke and make sure that wheels are turning free;
   - actuate the brake pedal when machine is running; this will allow the brake jaws to self-center;
   - check adjustment of the control cables of the parking brake; if necessary follow procedure outlined.

Parking brake (see fig. 26)

If the braking action is found to be poor, adjust control cables through nuts (8) fitted on control lever of the parking or emergency brake.

Note

If braking shoes are found to be worn out, the internal lever of the hand brake is allowed to come in touch with hubs. This will eliminate the braking action. Replacement of shoes is then necessary.

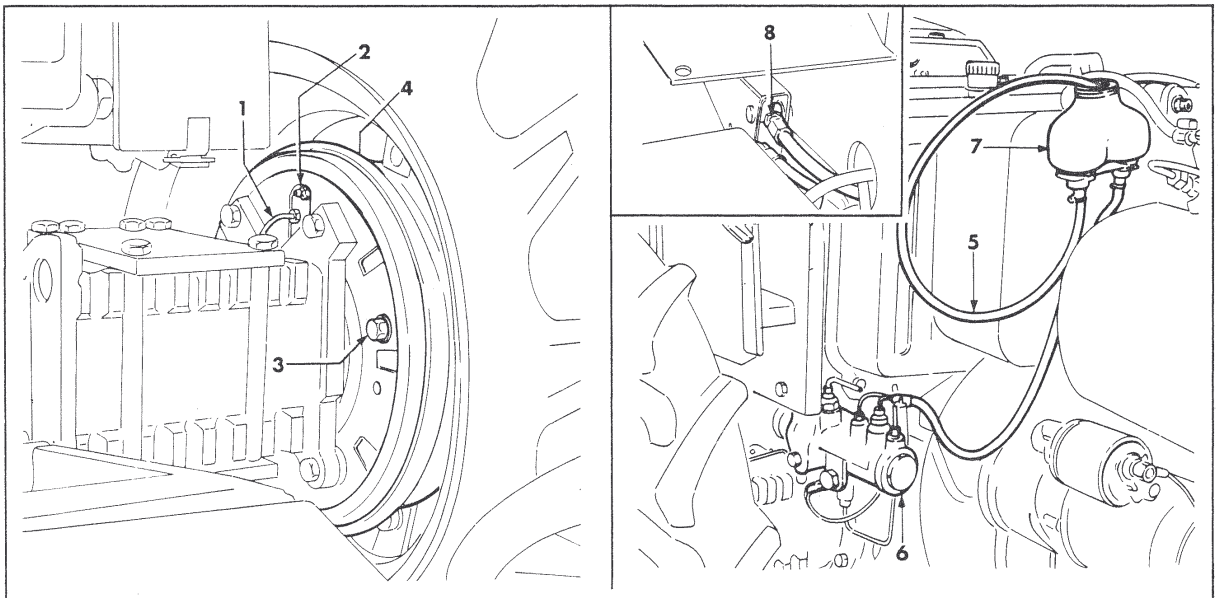

1. Oil delivery pipe to cylinder
2. Bleed valve
3. Adjusting screw for braking shoes opening
4. Braking shoe
5. Oil pipe from pump reservoir
6. Servocontrolled braking pump
7. Oil reservoir for braking system
8. Adjusting nuts for control cables

Figure 26. Bleeding of brake system and brake adjustment

Downloaded from www.Manualslib.com manuals search engine

CLUTCH

1. The clutch pedal should make an idle stroke of approx. 15 mm prior to obtaining disengagement of clutch.
2. If the idle stroke is insufficient (clutch slippage) or excessive (disengagement is not complete) adjust the relating control rod (see fig. 27) through adjusting nut (2) until an idle stroke of 15 mm is obtained.
3. In the event of unsuccessful adjusting procedure, have the clutch disassembled and inspected in a specialized workshop.

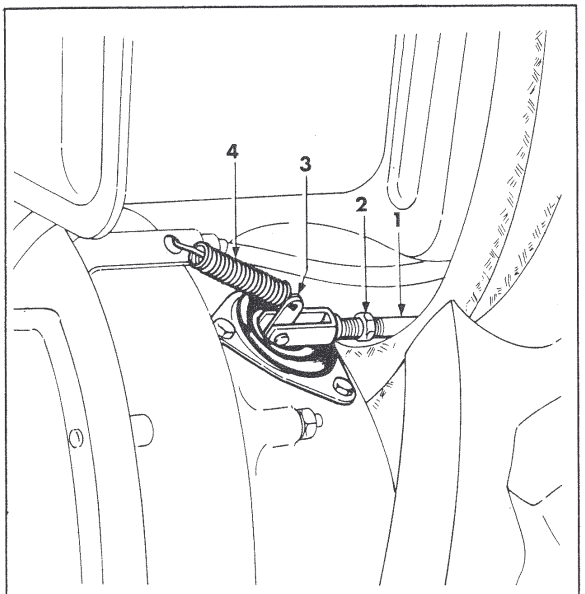

1. Control rod
2. Adjusting nut
3. Clutch control fork
4. Return spring

Figure 27. Clutch adjustment

LOCKING OF THE DIFFERENTIALS

Periodically make sure the differential locking system is properly adjusted. A correct adjustment is achieved by following procedure outlined (see fig. 28).

1. Make sure that equalizer springs (1) are 2 mm approx. from spring retainer rings (2). Control lever to be in "LOCKED" position.
2. If adjustment is found to be improper, proceed through the purpose-fitted nuts (3).

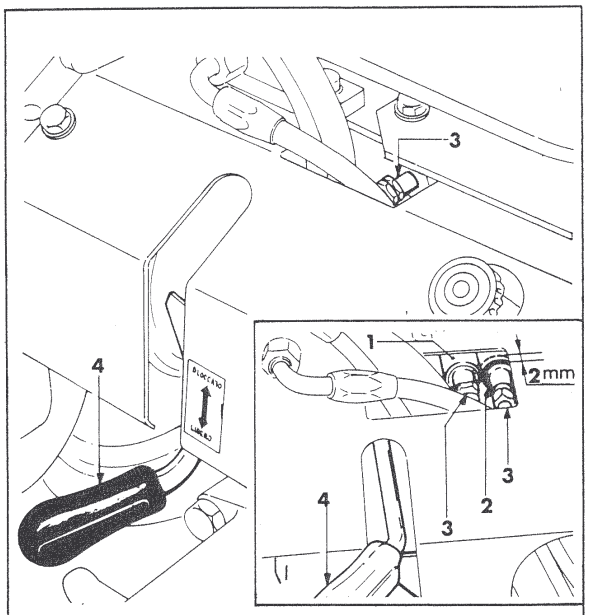

1. Equalizer springs
2. Retainer rings
3. Adjusting nuts
4. Differential locking lever

Figure 28. Differential locking adjustment

HYDRAYLIC SYSTEM

GENERAL

A schematic diagram of the hydraulic system is shown in fig. 29.
In the event of unsatisfactory or improper lifting of implements despite of smooth operation of the engine, the same procedure as described in pages concerning the hydraulic system maintenance is to be followed.

ELECTRICAL EQUIPMENT

Tractor circuits are provided with protective fuses located under the engine-hood (see fig. 30).
The elementary wiring diagram including applicances supplied on request, is shown in fig. 31.

Downloaded from www.Manualslib.com manuals search engine

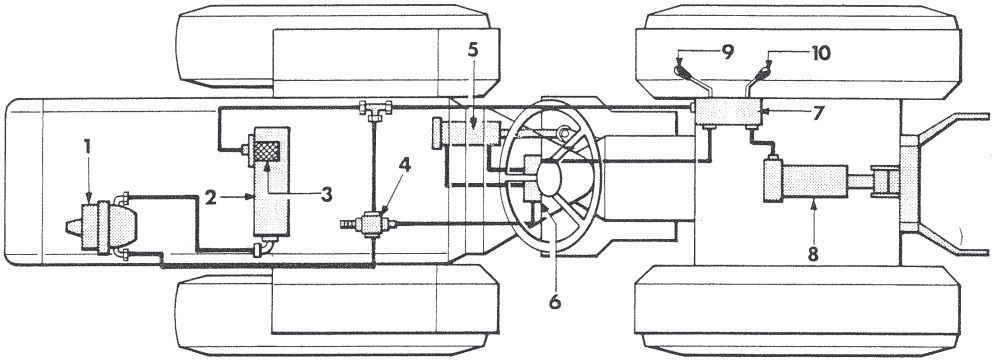

1. Hydraulic pump
2. Hydraulic oil reservoir
3. Filter on oil return
4. Relief valve
5. Steering jack
6. Hydraulic steering valve
7. Main control valve
8. Lifter jack
9. Control lever for implement up and down
10. Working depth adjusting lever

Figure 29. Hydraulic system diagram

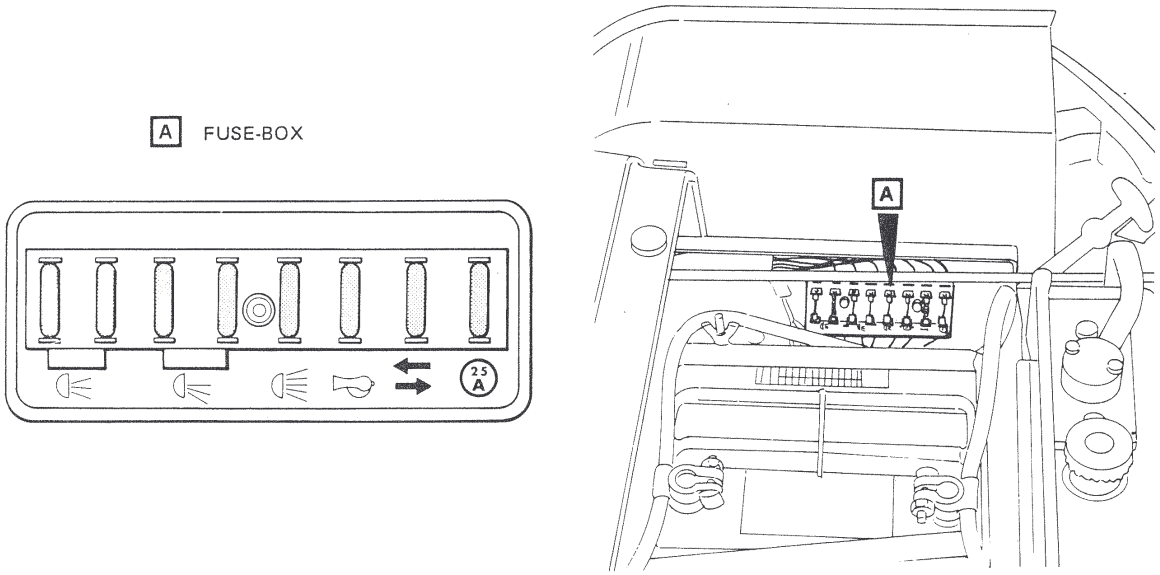

Figure 30. Fuse-box of electrical equipment

Downloaded from www.Manualslib.com manuals search engine

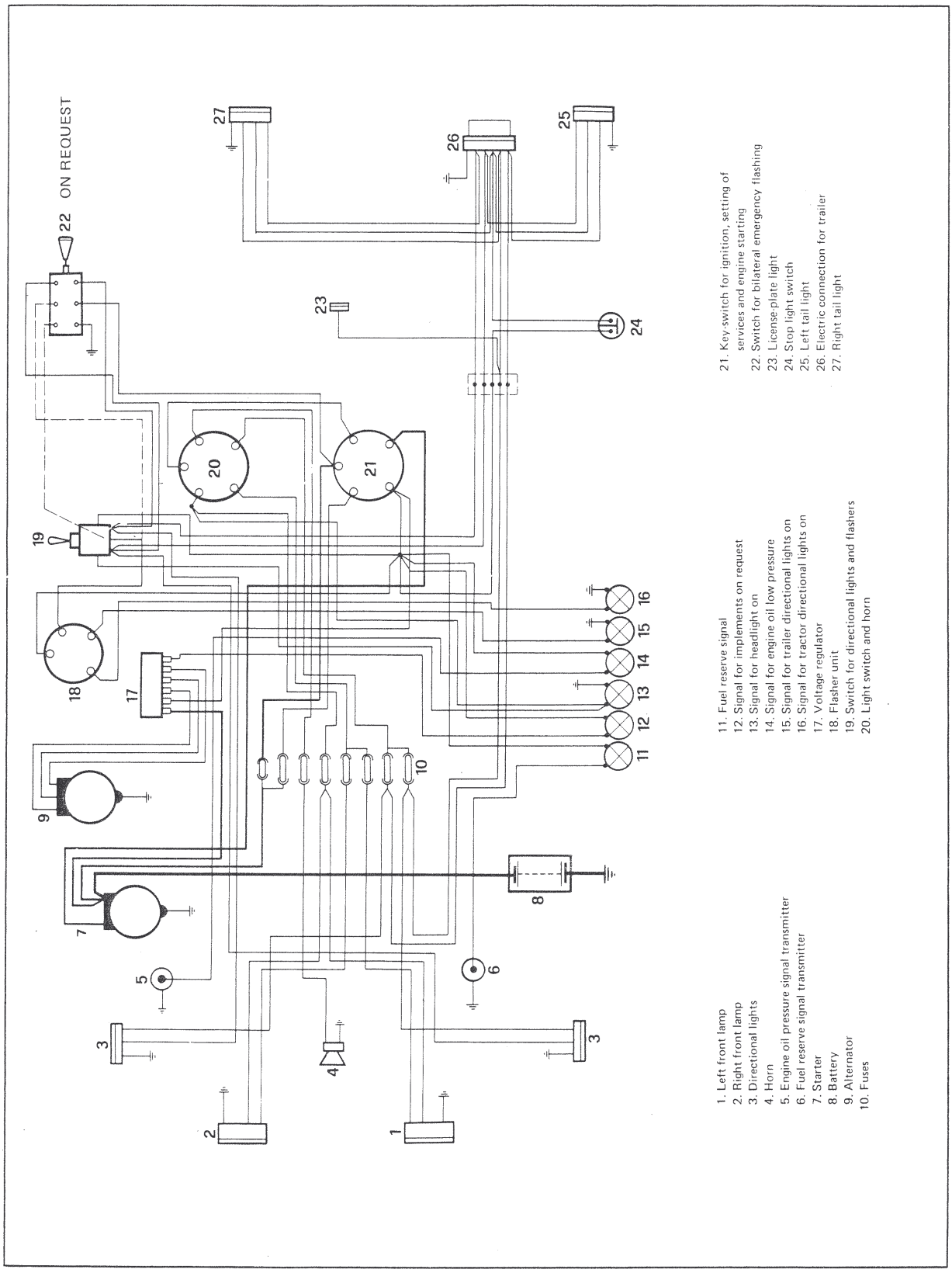

Figure 31. Electrical equipment

Downloaded from www.Manualslib.com manuals search engine

HYDRAULIC SYSTEM

SYSTEM INSPECTION

GENERAL

All necessary operations for an accurate inspection are described here-below. Overhaul of the hydraulic system will ensure it is in the ideal working order. Recommended steps for setting valves are outlined as well. **Strictly follow prescribed procedure.**

CHECKING OF OPERATING PRESSURE

Preliminary operations

a. Install a pressure gauge with 250 kg/sq.cm end-of-scale (minimum) in the hydraulic pump delivery fitting (see fig. 32).

Note

Location of hydraulic pump on engine body may be different from that indicated in fig. 32. Location may vary according to the engine installed on tractor.

b. Start the tractor engine and maintain it operating at 2000 RPM approx.

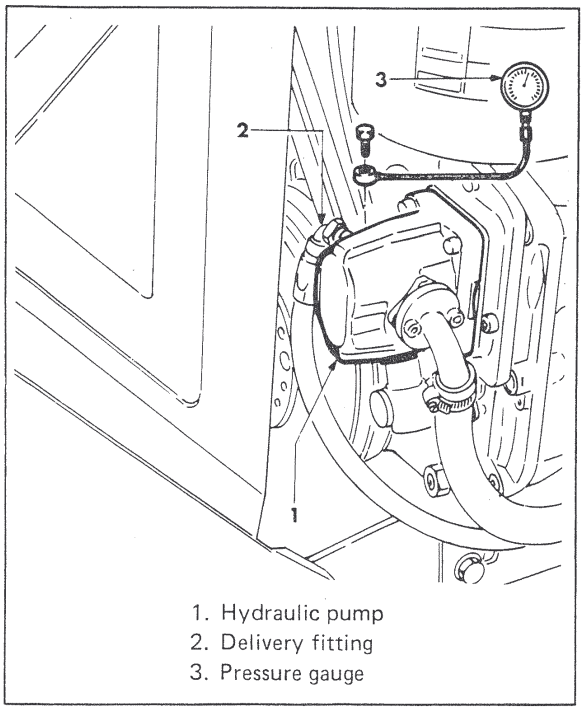

Figure 32. Installation of pressure gauge in the hydraulic pump delivery

STEERING SYSTEM OPERATING PRESSURE

(see fig. 33 and fig. 34)

a. Through the steering wheel steer tractor wheels to right or left as far as practicable (steering jack to be fully extended or retracted).

b. Make sure pressure gauge reading is 100 to 110 kg/sq.cm. If reading is different, adjust setting through valve (fig. 33 or fig. 34, item 1) of the hydraulic power steering unit, by screwing on or off adjusting screw (2) after removing valve cap (3).

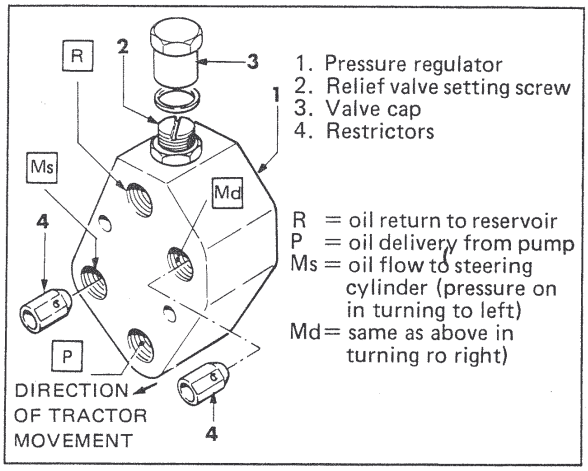

Figure 33. Setting of the hydraulic power steering valve (example A)

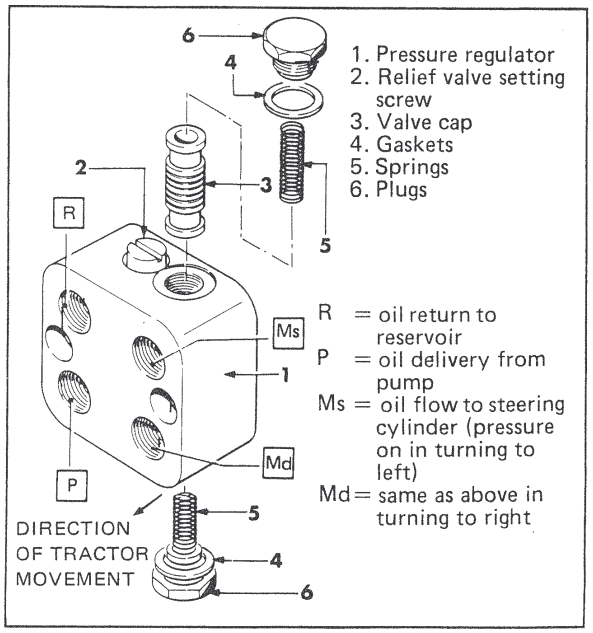

Figure 34. Setting of the hydraulic power steering valve (example B)

Downloaded from www.Manualslib.com manuals search engine

OPERATING PRESSURE OF HYDRAULIC LIFTER
(see fig. 35)

a. Place lever (2) in the "LIFT" position and lever (1) in "0" on the graduated scale.

b. Fully depress lever (3) to direction shown in the figure and hold it in place. Make sure that pressure gauge reads 100 to 120 kg/sq.cm.

c. If not, make sure that no evident oil leakage occurs in the main control valve, remove cover 4) and clean valves located beneath.

CAUTION

Do not tamper with adjusting nut (5) on main control valve.
ADJUSTMENT HAS BEEN ACCOMPLISHED BY TRACTOR MANUFACTURER AT TIME OF INSTALLATION.

RELIEF VALVE OPERATING PRESSURE

a. Fully depress lever (fig. 35, item 3) to direction shown and hold it in place.

b. Steer wheels to right or left as far as practicable (jack to be all the way extended or retracted). Make sure that pressure gauge reading is 130 to 140 kg/sq.cm.

c. If pressure is found to be lower, set properly the hydraulic system relief valve (see fig. 36) in screwing or screwing off adjusting nut with a screw-driver. Remove cap prior to taking action.

WARNING

Operating pressure in the hydraulic system never to exceed 170 kg/sq.cm.

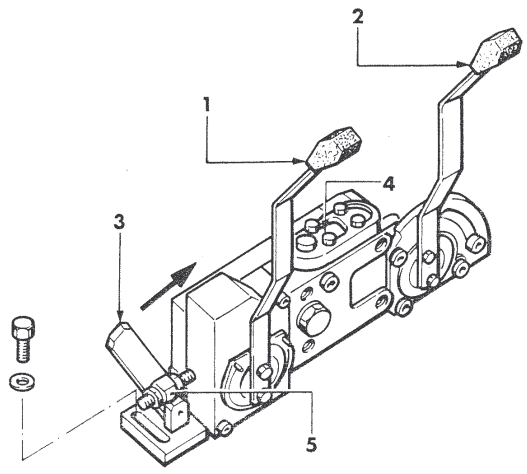

Note

See fig. 37 for additional details.

1. Controlled effort lever
2. Lifter control lever
3. Controlled effort sensitivity lever
4. Cover for distributor valves
5. Adjusting nut

Figure 35. Check of hydraulic lifter operating pressure

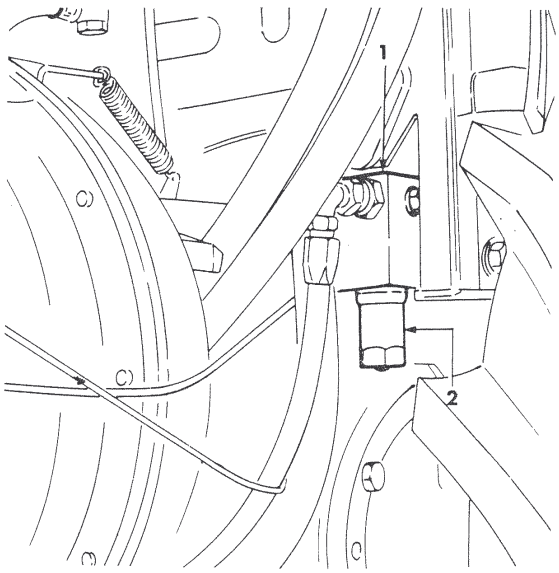

1. Relief valve
2. Adjusting nut protective cap

Figure 36. Setting of the hydraulic system relief valve

Downloaded from www.Manualslib.com manuals search engine

TROUBLE SHOOTING

HYDRAULIC LIFTER
(see fig. 37)

Note

Any failure in lifter operation is generally caused by improper or contaminated oil. When changing or refilling oil, rigidily adhere to directions furnished by manufacturer and exercice good cleaning and house-keeping practices.

TROUBLE	PROBABLE CAUSE AND REMEDY
a. Lifter will not come up (even at load).	1. Insufficient oil level. Fill oil reservoir. 2. Jamming pilot valve (14) caused by impurities contained in oil. Unscrew the four screws holding cover (26), unlock valve and clean. To prevent trouble from taking place again, carefully clean oil filter cartridge on return (see fig. 23).
b. Lifter does not lower. (This may be encountered in the case of a new apparatus after a fairly extended inactivity from final test).	1. Jamming of shaft (3). Dismount cover (22), place the control lever in down position. Unlock shaft gently tapping on.
c. Jumping of lifter in coming up.	1. Insufficient oil level. Fill oil reservoir. 2. Air drawn into the suction line. Check connectors for proper tightening and replace packings. Bleed tubing by squeezing. 3. Air drawn through the pump oil seal. Replace oil seal.
d. Lifter does not remain in place; it rises or falls with jerking action. When engine is off, load creeps down.	1. Leaking check valve (16). Take off cover (26), remove valve and clean valve seat. If seat and valve are found to be in good conditions and trouble is still encountered; change or filter oil and clean cartridge. 2. Oil seepage through piston seal or seal rings of cylinder cap, or through seal ring located between the body of the distributor block and the housing. Replace seal.
e. Poor lifting power. Anomalous overheating of the system.	1. Pump low efficiency. Overhaul pump or replace it. 2. Improper setting of relief valve (9, 10). Remove cover (26) and replace spring. 3. Valve plunger (9) and seat (10) are out of order and allow oil seepage. Replace the valve. 4. Impurity on the pilot valve seat (14). Take off cover (26), remove valve and clean valve seat. 5. Pilot valve seat worn out (14). Overhaul distributor block.
f. When lifter arms are fully "UP", relief valve cuts-in.	1. Jamming of shaft (3). Disassemble cover (22), place control lever in down position and release shaft by tapping. 2. Improper setting of the raise limit-stop. Lift lifter arms (fig. 38, detail 1), through lever (2), adjust tie-rod (3) with a screwdriver (4) until engine speed rate is caused to increase hydraulic circuit not under pressure any longer).
g. Escape of aerated oil through the breather plug.	1. Oil level too high or too low. Top off oil to recommended level. 2. Air drawn through the suction line. Tighten the fittings, inspect welds, replace gasket. 3. Air drawn through pump oil seal. Replace oil seal.

Downloaded from www.Manualslib.com manuals search engine

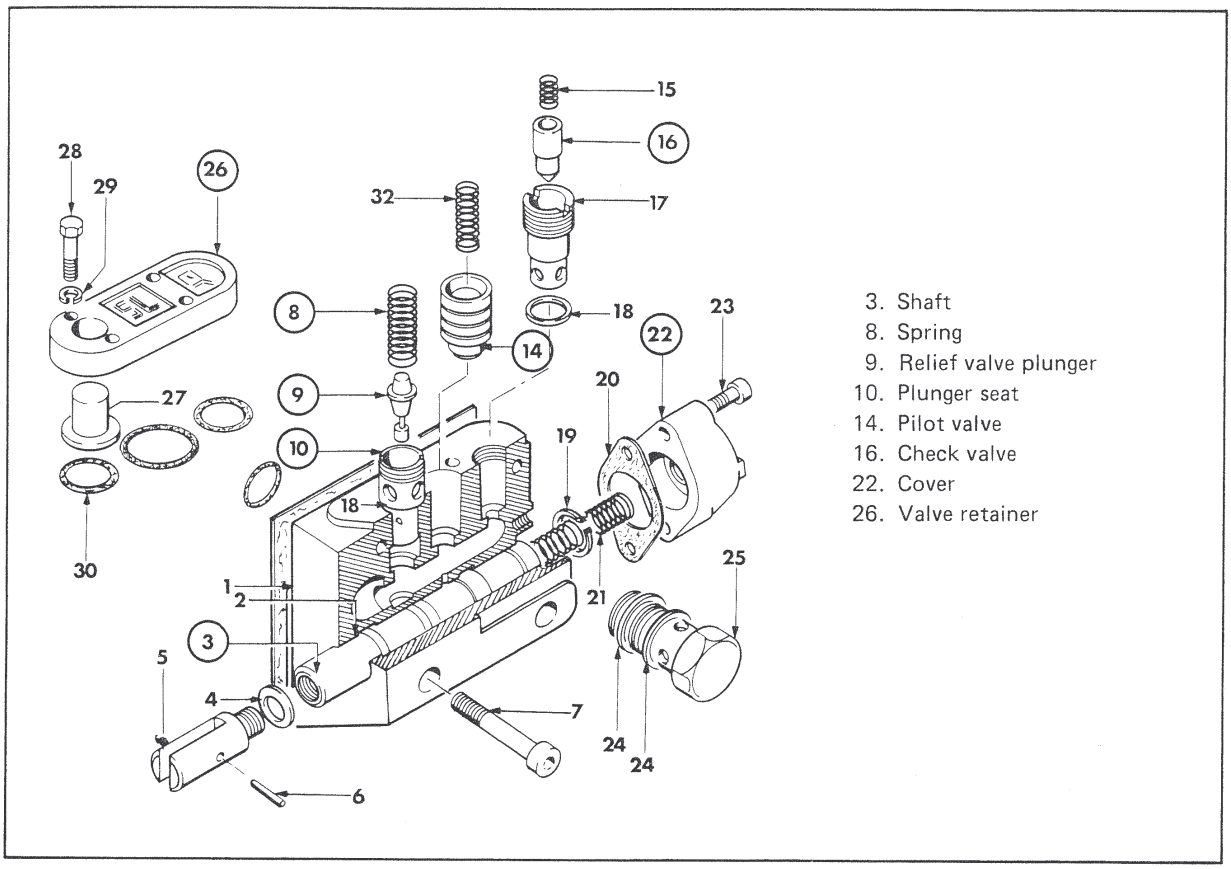

Figure 37. Hydraulic lifter control valve

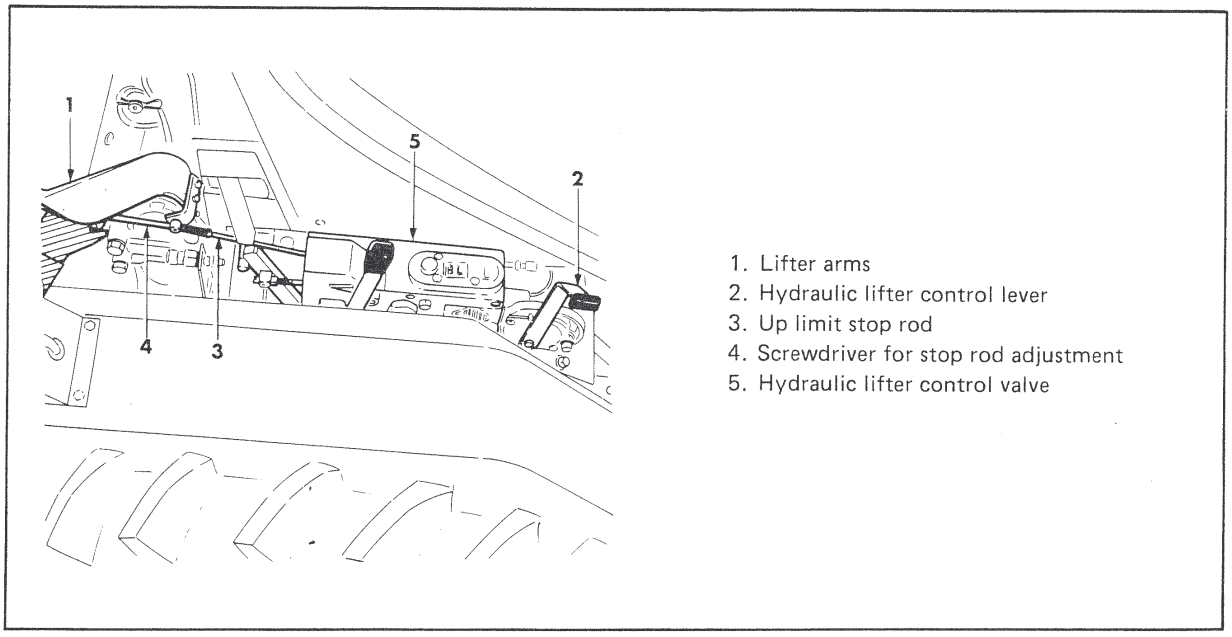

Figure 38. Adjustment of UP limit stop rod

Downloaded from www.Manualslib.com manuals search engine

HYDRAULIC STEERING

TROUBLE	PROBABLE CAUSE AND REMEDY
a. Incorrect steering movement.	1. Air in the steering jack. Bleed the system. 2. Jack packings are faulty. Replace all jack seals. 3. Hydraulic steering valve dirty. Where valve of fig. 33 is fitted, disassemble and clean restrictors. Where valve of fig. 34 is provided, disassemble and clean valve piston and verify that springs are not broken.
b. Excessive force required to rotate the steering wheel.	1. Differential locking engaged. Release it. 2. Improper adjustment of lifter limit-stop. Lower the filter. If trouble is not solved, follow suggestions given under section "f" concerning trouble shooting of hydraulic lifter.

CAUTION

In the event the above described inspection as well as circuit cleaning and replacement of worn-out packings be not sufficient to solve the trouble encountered, HAVE THE HYDRAULIC POWER STEERING UNIT REPLACED WITHOUT DISMANTLING. ANY HYDRAULIC POWER STEERING UNIT REPAIR SHALL BE MADE EXCLUSIVELY BY MANUFACTURER OR AUTHORIZED PERSONNEL. THE MANUFACTURER DISCLAIMS ALL LIABILITY OR REQUEST OF WARRANTY IF HYDRAULIC POWER STEERING UNIT APPEARS TO BE TAMPERED WITH.

Downloaded from www.Manualslib.com manuals search engine

HOW TO ORDER SPARE PARTS

NOTE

When ordering, always state:

- TYPE AND MODEL OF THE MACHINE
- SERIAL NUMBER OF THE MACHINE
- CODE NUMBER OF THE PART
- REQUIRED QUANTITY
- REQUIRED DELIVERY TERMS
- ADDRESS OF THE ORDERING FIRM

HOW TO IDENTIFY A PART

– **Identify the piece required on the figure** (the whole machine has been split into well-defined units, as shown by the index of the figures.

– **Read the code number.** If the said number does not have any symbol alongside it, it is valid for all machines listed on the top right of the figure. If the code number has one or more symbols alongside it, or if a piece has more than one number and symbols alongside them, the right one must be identified by reading the meaning of the symbols.

For better machine-running, greater security and guarantee, always ask for ORIGINAL SPARE PARTS.

SYMBOLS USED IN THE SPARE PARTS CATALOGUE

(The numbers mentioned are only an indication)

– **ROUND** - ○●◒◑⊙⊗ **etc.**

Indications of validity for type of machine
Example:

◑ **1200** The parts so indicated are valid only for the machine mod. "1200"

– **SQUARE** - □■⬓◨⊡⊠ **etc.**

Indications of validity of the individual parts
Example:

□ → **585001** The part so indicated is valid for machines up to Serial N° 585001

■ **585002** → The part so indicated is valid for machines from Serial N° 585002 onwards

– **TRIANGULAR** - △▲◭▽▼▽ **etc.**

Indications of validity for the subassemblies indicated alongside. TRIANGULAR SYMBOLS are always linked to the under-listed.

Subassembly symbols

ENGINES

Ex. △ H2000P : It indicates an engine type H2000P

ROTAVATORS WITH FIXED HOOD

Ex. △ cm 100 : It indicates a rotavator with 100-cm fixed hood

ROTAVATOR WITH ADJUSTABLE HOOD

Ex. △ cm 75 : It indicates a rotavator with 75-cm adjustable hood

ADJUSTABLE DISC WHEEL

Ex. △ 5.00-12 : Shows the adjustable disc wheel type 5.00-12

FIXED DISC WHEEL

Ex. △ 6.5-15 : Show the fixed disc wheel type 6.5-15

LENGTH TO BE SHOWN ←→

Ex. ←mm→ 100 : Shows that the item is long 100 mm

PUMPS

Ex. △ SL985 : It indicates a hydraulic pump type SL985

ELECTRIC SYSTEM

Ex. △ EXPORT: It indicates an electrical system for export-type machines

JOINT

Ex. △ J284 : It indicates a joint type J284

CUTTING BARS

Ex. △ cm 125 : It indicates a cutting bar 125 cm wide

CUTTING BAR TEETH

Ex. △ mm 38 : It indicates teeth with centre distance 38 mm

TYPE OF MACHINE

Ex. △ 99 : It is valid for a machine model 99

– **ASTERISKS**

Indications of validity for standard parts, parts on request, parts made by another manufacturer.

✳ **A.R.** The part thus indicated is supplied only at Customer's request

⊛ **STANDARD** The part thus indicated is standard make or assemby

⊠ **Ditta S.p.A.** The part thus marked is valid only for the Customer indicated

– **ABBREVIATIONS**

= Left
= Right

➡ = SEE NEXT PAGE

Downloaded from www.Manualslib.com manuals search engine

FERRARI

SPARE PARTS CATALOGUE

AGRICULTURAL TRACTOR MOD. 85

INDEX OF ILLUSTRATIONS

Fig.	C1009A-1	Body (1st part)
Fig.	C1009B-1	Body (2nd part)
Fig.	C1107	Clutch and control
Fig.	C1109A	Double clutch (1st part)
Fig.	C1109B	Double clutch (2nd part)
Fig.	C1206	Gear case
Fig.	C1306A	Gear box (1st part) (For all machines)
Fig.	C1306B	Gear box (2nd part) (Straight - tooth gears)
Fig.	C1306C	Gear box (2nd part) (Elical gears)
Fig.	C1306D	Gear box (3rd part) (Straight - tooth gears)
Fig.	C1306E	Gear box (3rd part) (Elical gears)
Fig.	C1407A	Gear box shifting mechanism (1st part)
Fig.	C1407B	Gear box shifting mechanism (2nd part)
Fig.	C1511	Differential, front
Fig.	C1605-1	Intermediate housing
Fig.	C1706A	Reax axle, housing
Fig.	C1706B	Reax axle, gears and control
Fig.	C1908	Reax axle, shaft and differential
Fig.	C2107A-1	Front hydraulic brakes
Fig.	C2107B-1	Rear hydraulic brakes
Fig.	C2206A	Implement lifter — Two-point hitch
Fig.	C2206B	Implement lifter — Three-point hitch
Fig.	C2605A	Electrical system (1st part)
Fig.	C2605B	Electrical system (2nd part)
Fig.	C2807	Accessories
Fig.	C2905	Wheels
Fig.	F1103-2	Rotary cultivator, drive shaft
Fig.	F1301A-4	Rotary cultivator, case and components
Fig.	F1301C-2	Rotary cultivator, fixed hood

HYDRAULIC EQUIPMENT

Refer to figures H00007 through H00533

Downloaded from www.Manualslib.com manuals search engine

FERRARI

42045 LUZZARA (RE) TEL. (0522) 835524 (5 LINEE)

CARROZZERIA (1a PARTE)
BODY (1st PART)
CARROSSERIE (1ère PARTIE)
KARROSSERIE (1 TEIL)
CARROCERIA (1 PARTE)

○ ● ◑

85-86-86RS

1a-0677	2a-0278

No. ORDIN. / *PART No.* / No. ORDIN. / *BESTELL No.* / No. REFERENCIA	
1	16.0032.245 ◭
–	16.0032.243 ○ ▽
–	16.0032.244 ▲
–	16.0032.256 ○ △
2	11.0033.901
3	11.0033.902
4	81.4628.010
5	11.0032.947
6	84.3522.000
7	81.4517.000
8	16.0033.900 ●
–	16.0032.900 ○
–	16.0033.901 ◑
9	11.0033.271
10	11.0073.277
11	84.3843.060
12	86.3724.050
13	86.3254.000
14	84.3755.000 ○ ●
15	84.3812.020
16	84.3812.020
17	06.0015.214
18	80.4020.000
19	16.0032.258
20	16.0032.228
21	84.3755.050 ○ ●
22	86.3205.000 ○ ●
–	86.3411.000 ◑
23	86.3205.000 ○ ●
–	86.3411.000 ◑
24	84.3812.000 ○ ●
25	16.0032.205 ○ ● ✋
–	16.0032.206 ○ ● ✋
–	16.0032.202 ◑ ✋
–	16.0032.203 ◑ ✋
26	16.0032.232 ○ ●
–	16.0033.204 ◑
27	11.0032.427
28	16.0017.903
29	84.3604.050
30	81.4556.000
31	11.0032.428
32	85.9070.000
33	83.5505.000
34	82.8027.000
35	86.3275.000 ○ ●
36	86.3300.000 ○ ●
–	86.3735.000 ◑
37	16.0032.221 ○ ● ✋
–	11.0032.415 ◑ ✋
–	16.0032.220 ○ ● ✋
–	11.0032.416 ◑ ✋
38	85.9080.000
39	85.6154.010 △
–	85.6162.000 ▲
40	11.0032.331
41	09.0032.221
42	80.4147.000
43	85.7150.000 ▲
–	85.7005.030 △
44	85.7004.000
45	85.6146.000
46	16.0032.204 ○ ●
–	16.0033.201 ◑
47	16.0032.203 ○ ●
48	84.3443.050 ◑

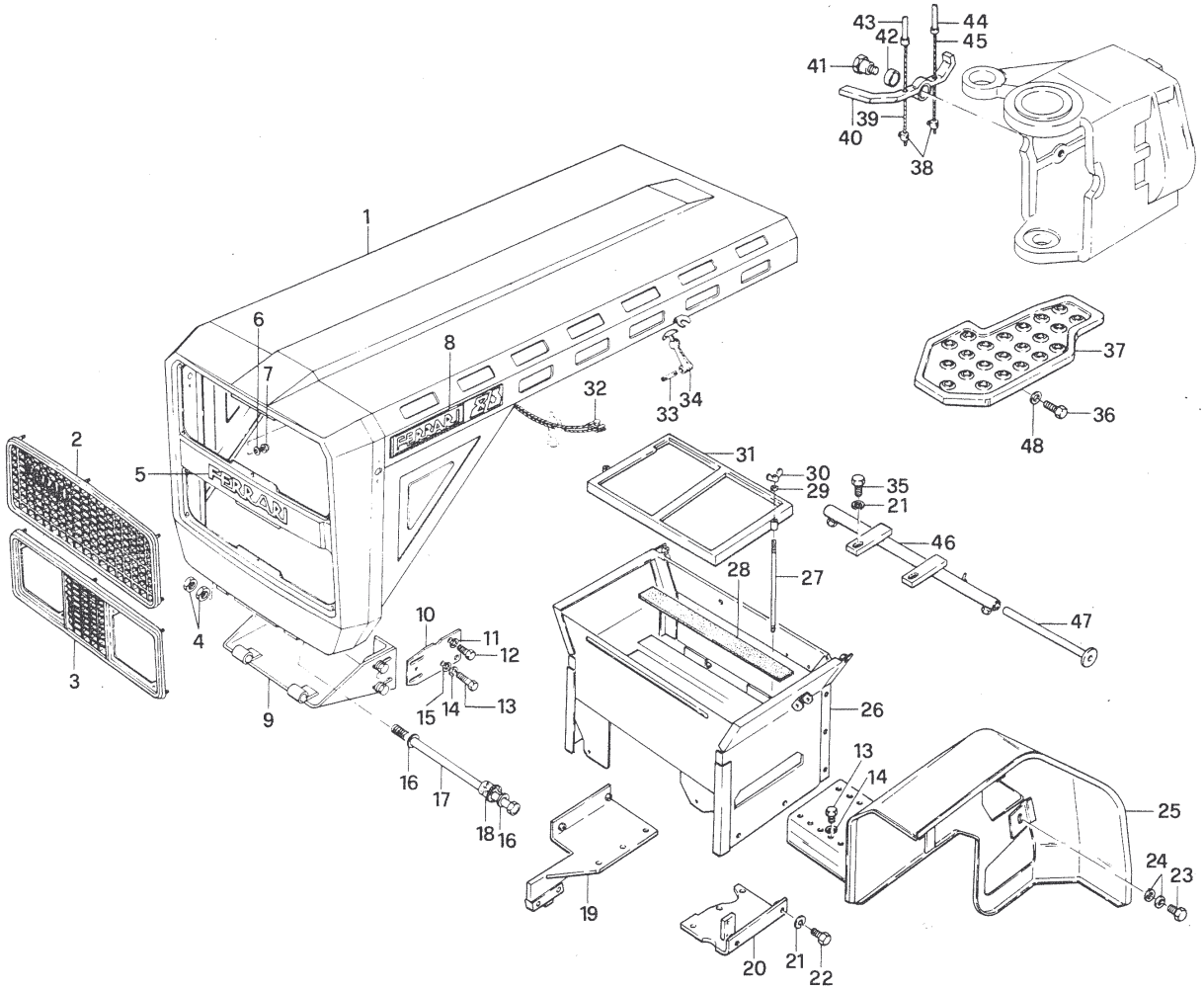

T.P.S. 4-289

Segnalazioni di validità / *Usage code* / Signalisations de validité / *Gultigkeitsvermerk* / Indicaciones de validez				
	▲ LDA673-833	DOPPIA FRIZIONE / *DOUBLE CLUTCH* / EMBRAYAGE DOUBLE / *ZWEIFACHKUPPLUNG* / EMBRAGUE DOBLE	◭ LDA673-833	
	▽ LDA832		△ LDA832	

~~C1009A~~	
C1009A	1

Downloaded from www.Manualslib.com manuals search engine

No. ORDIN. / *PART No.* / No. ORDIN. / *BESTELL No.* / No. REFERENCIA			
1	16.0032.257 ✻	29	85.3811.000
2	16.0032.253 ✻	30	16.0032.227 ○ ●
3	16.0032.254 ✻	–	16.0033.207 ◑
4	84.3755.000 ✻	31	84.3818.000
5	86.3572.000 ✻	32	86.3328.000
6	81.4706.050 ✻	33	81.4581.000
7	84.3887.000 ✻	34	84.3643.060 ○ ●
8	86.4116.050 ✻	35	16.0032.251 ✋
9	84.3921.030 ✻	–	16.0032.252 ✋
10	86.4223.050 ✻	36	11.0033.254
11	86.3254.000	37	86.2555.000 ○ ●
12	84.3818.000	38	16.0032.265
13	01.0001.589	39	11.0033.221
14	86.2108.050	40	86.2097.010
15	80.8854.000	41	84.3570.000
16	16.0032.012	42	81.4546.000
17	84.9212.000	43	16.0032.226
18	85.2652.000	44	86.3683.000
19	16.0032.249	45	16.0032.223 ○ ● ✋
20	16.0032.250	–	16.0033.205 ◑ ✋
21	85.4587.000	–	16.0032.224 ○ ● ✋
22	84.3679.000	–	16.0033.206 ◑ ✋
23	86.2488.000	46	86.3276.000
24	84.3708.000	47	84.3812.020
25	16.0032.235	48	16.0032.225 ○ ●
26	16.0032.200 ○ ●	49	16.0032.263
–	16.0033.200 ◑	50	16.0032.264
27	49.2168.099	51	81.4644.000
28	16.0032.010		

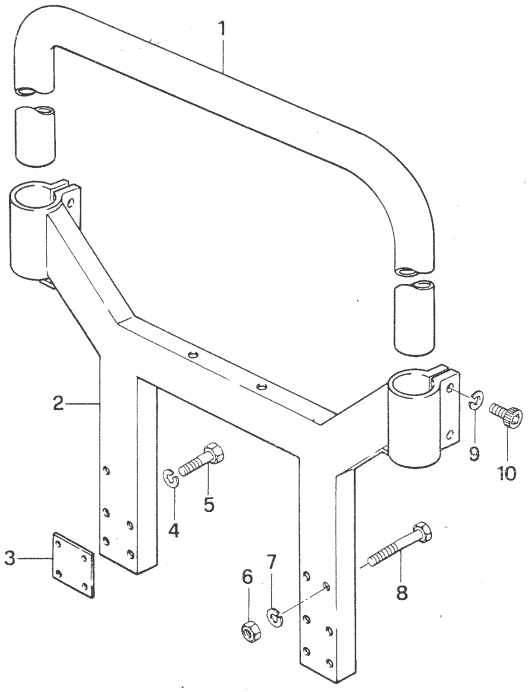

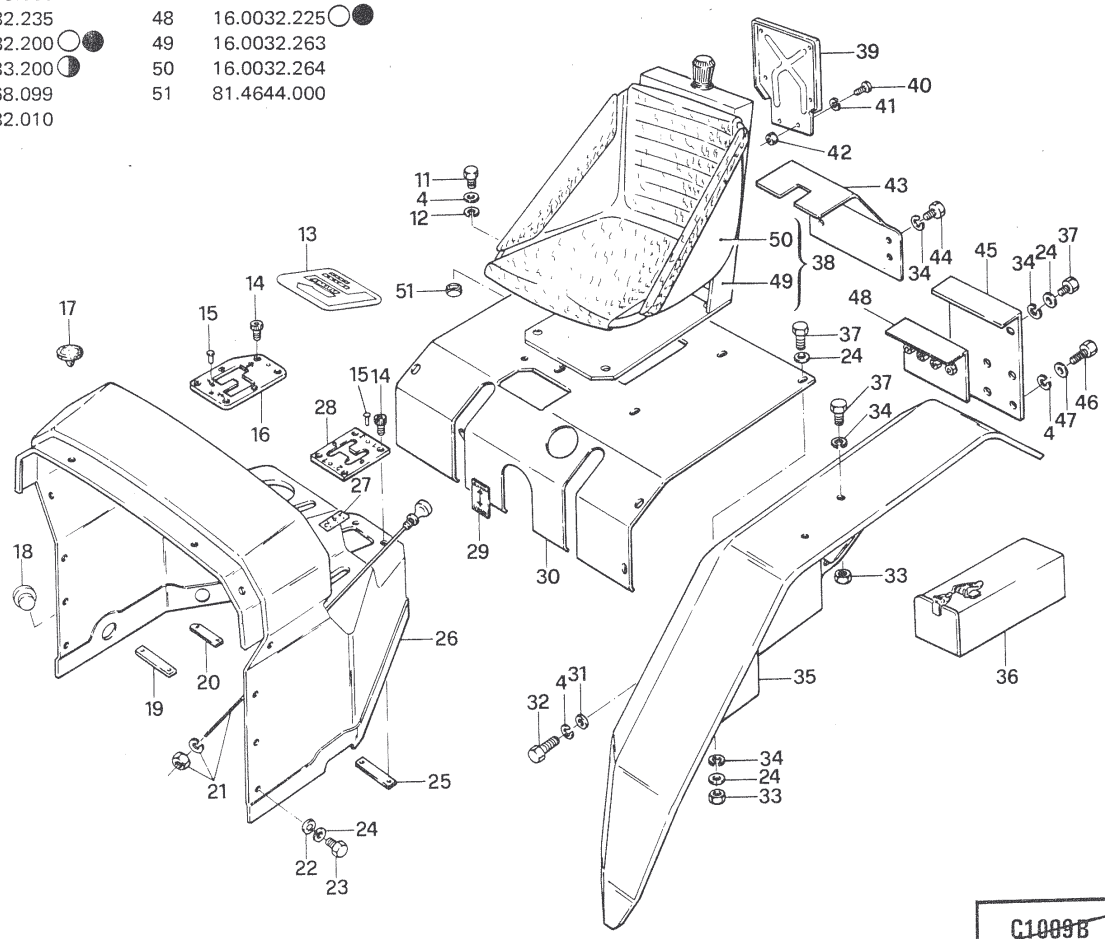

T.P.S. 4-289

Segnalazioni di validità
Usage code
Signalisations de validité
Gultigkeitsvermerk
Indicaciones de validez

✻ A.R.

Downloaded from www.Manualslib.com manuals search engine

FERRARI
42045 LUZZARA (RE) TEL. (0522) 835524 (5 LINEE)

DOPPIA FRIZIONE (1a PARTE)
DOUBLE CLUTCH (1st PART)
EMBRAYAGE DOUBLE (1ère PARTIE)
ZWEIFACHKUPPLUNG (1 TEIL)
EMBRAGUE DOBLE (1a PARTE)

	No. ORDIN.		No. ORDIN.		No. ORDIN.		No. ORDIN.
1	16.0032.218	11	16.0016.212	21	81.4706.000	31	86.3554.000
2	81.0505.000	12	83.1139.000	22	86.3646.000	32	86.2882.000
3	84.3685.000	13	80.8835.000	23	16.0016.200	33	84.3643.000
4	82.6039.000	14	16.0016.012	24	80.2054.000	34	16.0016.901
5	16.0016.216	15	81.4541.000	25	16.0016.215	35	16.0016.904
6	81.4581.000	16	86.2169.000	26	16.0016.900	36	86.3276.000
7	86.0060.000	17	16.0016.903	27	86.3347.000	37	84.3755.050
8	86.1998.000	18	16.0016.210	28	16.0016.011	38	16.0016.010
9	11.0015.903	19	84.3879.000	29	16.0016.902	39	16.0016.208
10	11.0015.209	20	84.3843.050	30	81.4644.000		

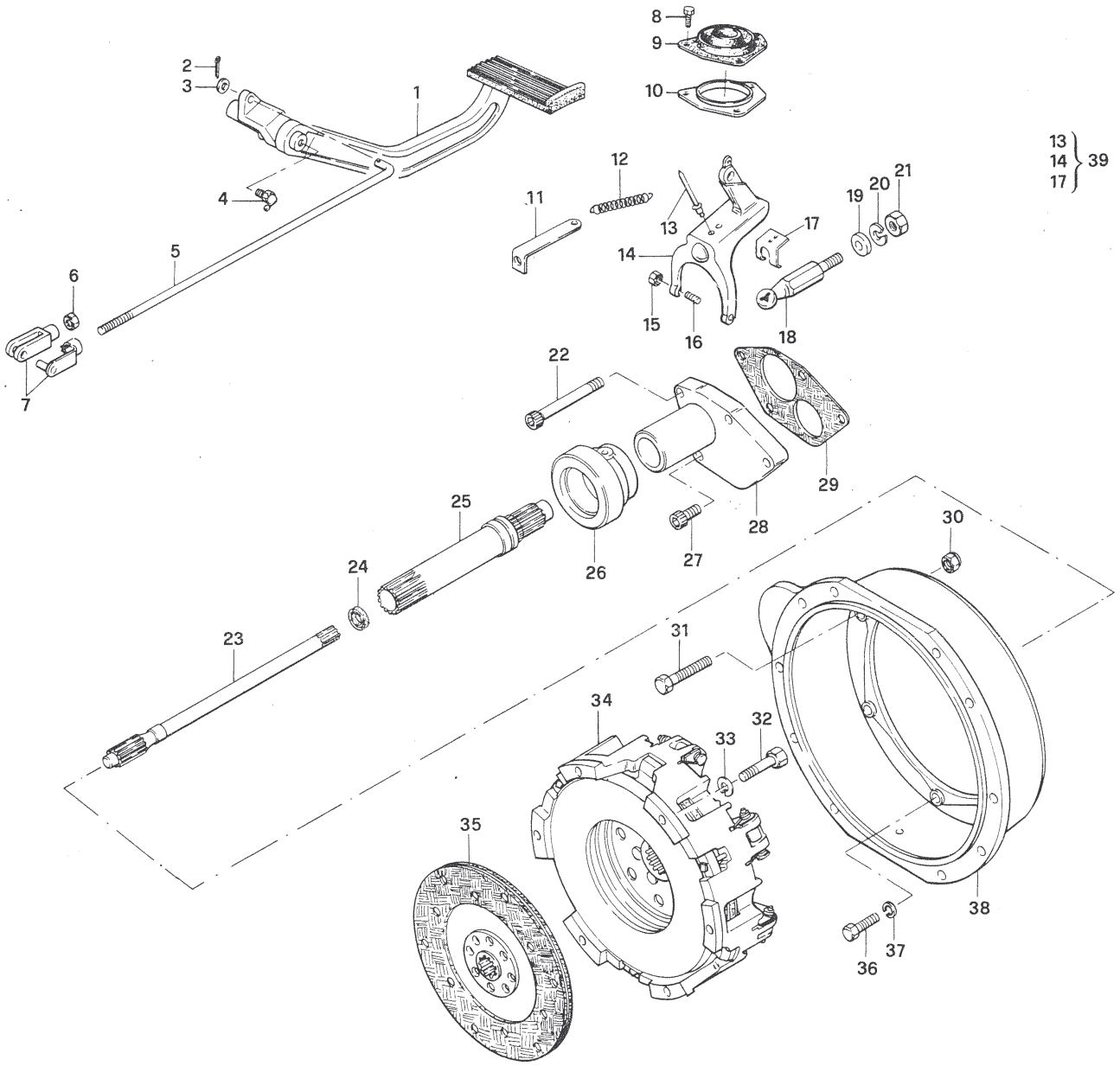

Downloaded from www.Manualslib.com manuals search engine

FERRARI
42045 LUZZARA (RE) TEL. (0522) 835524 (5 LINEE)

FRIZIONE E RELATIVO COMANDO
CLUTCH AND CONTROL
EMBRAYAGE ET COMMANDE D'EMBRAYAGE
KUPPLUNG UND ENTSPRECHENDE STEUERUNG
EMBRAGUE Y MANDOS

85-86-86RS

2a - 0278

	No. ORDIN.		No. ORDIN.		No. ORDIN.
1	81.2574.000	11	81.4644.000	21	86.0060.000
2	16.0015.902	12	16.0015.201	22	81.4581.000
3	16.0015.901	13	16.0015.900	23	16.0032.234
4	86.3276.000	14	81.9134.050	24	82.6039.000
5	84.3755.000	15	81.9134.010	25	84.3685.000
6	86.3554.000	16	16.0015.200	26	81.0505.000
7	84.3643.050	17	83.1139.000	27	16.0032.218
8	86.2554.000	18	86.1998.000	28	84.3817.000
9	85.1232.000	19	11.0015.903	29	86.3155.000
10	16.0015.010	20	11.0015.209		

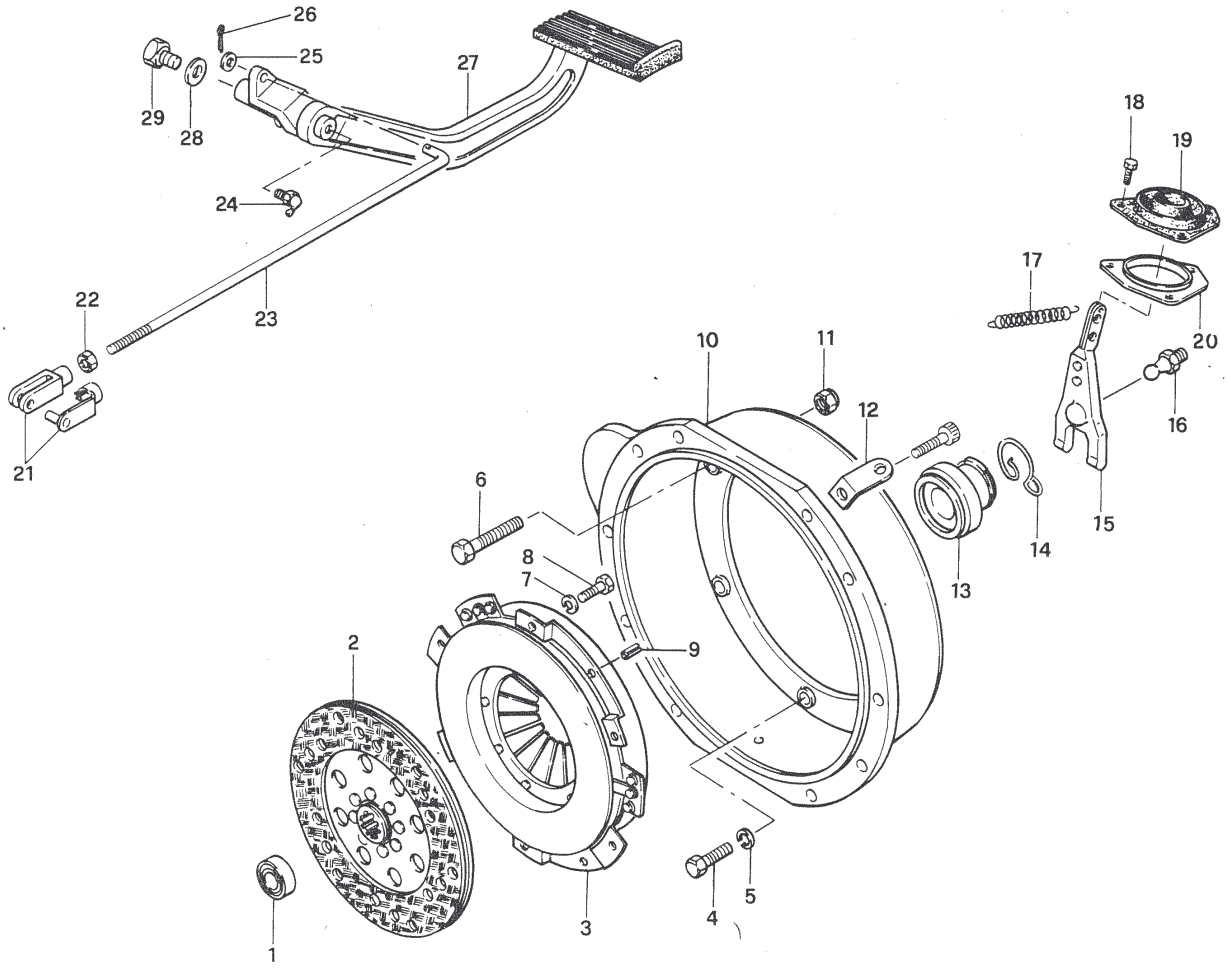

T.P.S. 4-289

Segnalazioni di validità
Usage code
Signalisations de validité
Gultigkeitsvermerk
Indicaciones de validez

~~C1107A~~
C1107

Downloaded from www.Manualslib.com manuals search engine

No.	ORDIN.
1	84.3647.000
2	86.2457.000
3	86.3105.000
4	16.0005.013
5	16.0005.271
6	86.3383.000
7	84.3755.050
8	16.0005.260
9	85.2699.060
10	86.3253.000
11	11.0006.021
12	08.0005.916
13	85.2766.000
14	16.0016.014 ▲
15	16.0016.016 ▲
16	16.0005.010
17	16.0005.020
18	85.3512.000
19	85.2628.000
20	84.3803.000
21	86.3113.000
22	16.0005.904
23	86.2108.000
24	11.0005.905
25	16.0005.012
26	85.1408.000
27	16.0005.901
28	16.0005.011
29	86.3638.000

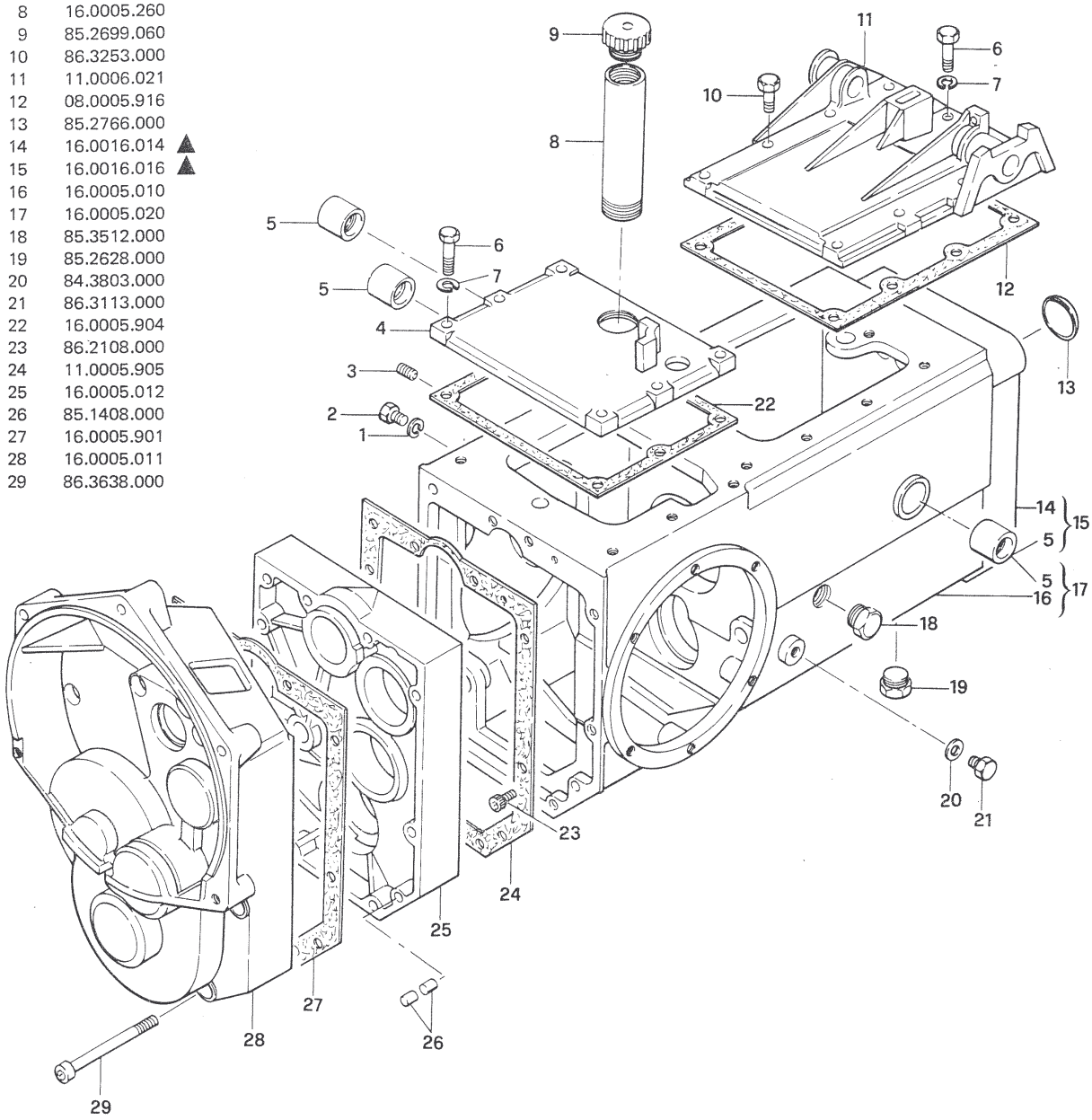

T.P.S. 4-108

Segnalazioni di validitá

▲ VERSIONE DOPPIA FRIZIONE
DOUBLE CLUTCH

C1206

Downloaded from www.Manualslib.com manuals search engine

DOPPIA FRIZIONE (2a PARTE)
DOUBLE CLUTCH (2nd PART)
EMBRAYAGE DOUBLE (2ème PARTIE)
ZWEIFACHKUPPLUNG (2 TEIL)
EMBRAGUE DOBLE (2a PARTE)

	No. ORDIN.		No. ORDIN.		No. ORDIN.
1	80.2178.000	12	84.4378.000	23	80.1229.000
2	80.1299.000	13	81.2708.020	24	16.0016.204
3	16.0016.213	14	16.0016.201	25	85.1150.000
4	81.2894.010	15	80.1098.000	26	80.1105.000
5	84.4487.000	16	81.2692.020	27	16.0016.205
6	80.1264.000	17	80.0047.000	28	16.0016.206
7	16.0016.015	18	16.0016.211	29	16.0016.207
8	16.0016.013	19	86.2019.000	30	81.2562.000
9	81.2708.010	20	16.0016.218	31	80.1246.000
10	16.0016.209	21	81.2731.030	32	16.0016.217
11	80.1185.000	22	16.0016.100		

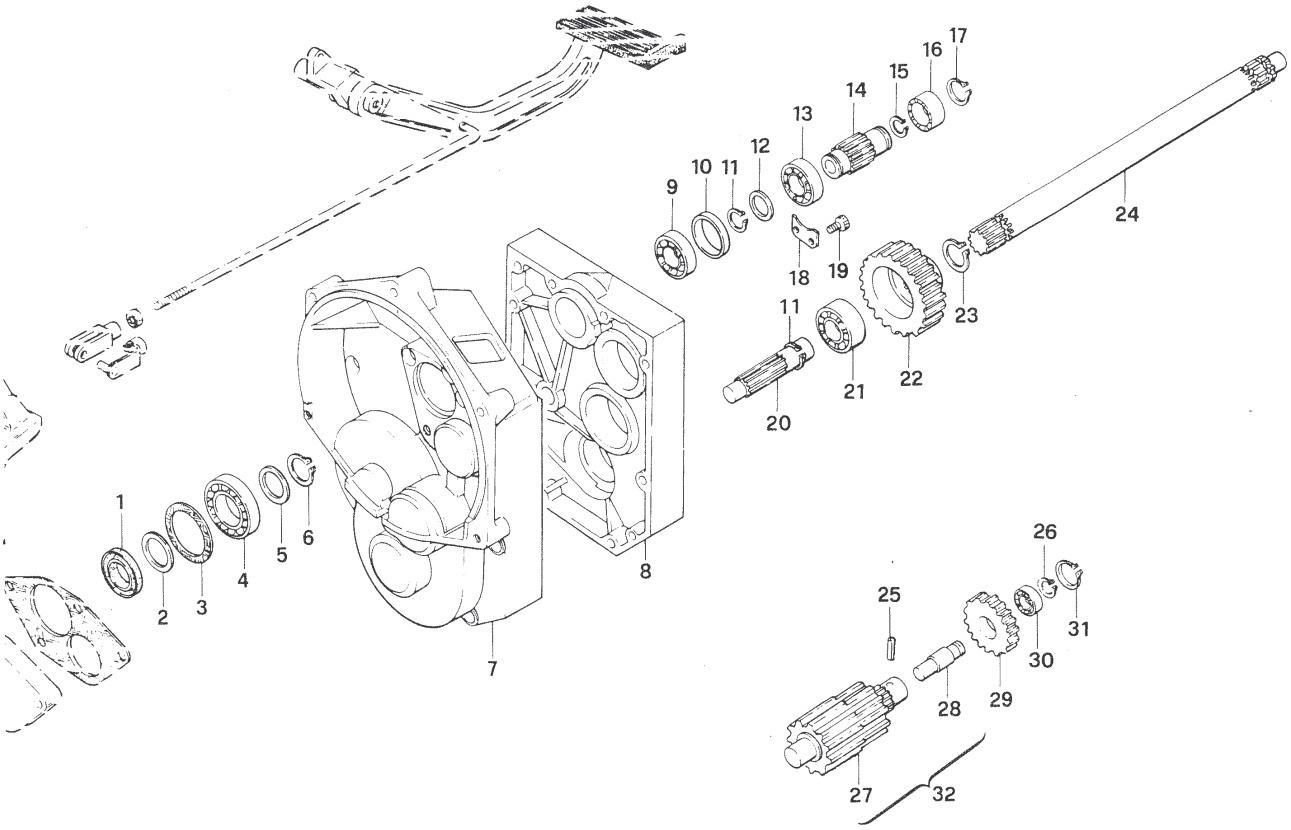

Downloaded from www.Manualslib.com manuals search engine

INGRANAGGI CAMBIO (1a PARTE)
(VALE PER TUTTE LE VERSIONI)
GEAR BOX (1st PART) (FOR ALL MACHINES)

○ ● ◑ 85-86-86RS

	No. ORDIN.
1	81.2656.000
2	16.0005.218
3	16.0005.203
4	16.0005.219
5	16.0005.206
6	16.0005.205
7	80.1333.000
8	16.0005.106
9	16.0005.105
10	16.0005.108
11	81.2832.000
12	80.0057.050
13	16.0005.251
14	80.1149.000
15	84.4207.060
16	16.0005.100 ○
—	16.0006.100 ● ◑
17	80.2092.000
18	16.0005.215
19	16.0005.101 ○
—	16.0006.101 ● ◑
20	16.0005.200
21	81.2731.040
22	81.4543.000
23	84.3571.000
24	16.0005.227
25	86.2191.000
26	16.0005.202
27	16.0005.217
28	16.0005.216
29	84.7020.010
30	16.0005.107
31	85.0114.000 (0,2 mm)
—	85.0114.010 (0,3 mm)
—	85.0114.020 (0,5 mm)
32	81.2731.030
33	16.0005.103
34	16.0005.102
35	80.1400.000

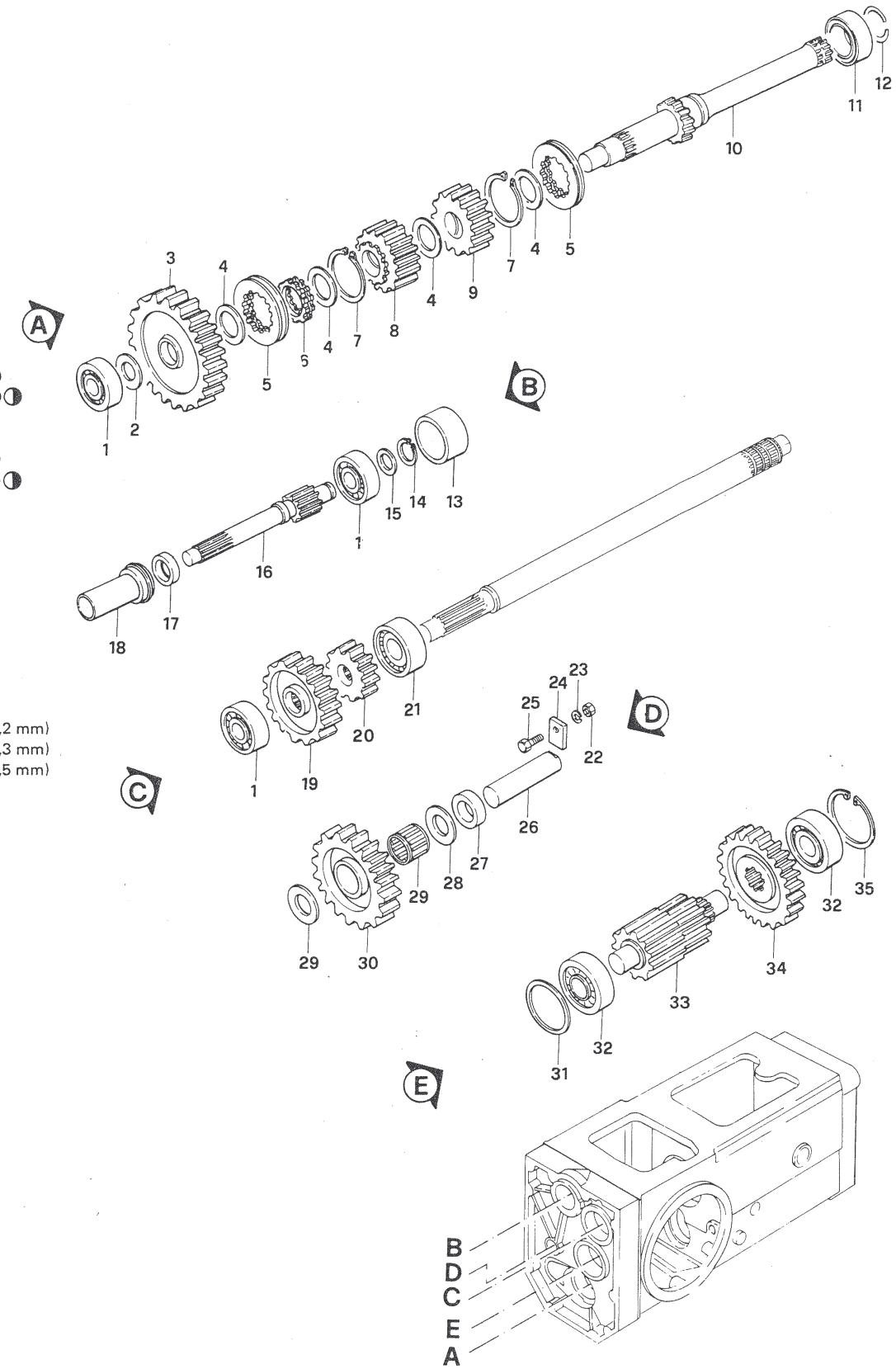

T.P.S. 4-108

Segnalazioni di validitá

Downloaded from www.Manualslib.com manuals search engine

FERRARI
42045 LUZZARA (RE) TEL. (0522) 835524 (5 LINEE)

INGRANAGGI CAMBIO (2a PARTE)
(VERSIONE CON INGRANAGGI DIRITTI)
GEAR BOX (2nd PART) (STRAIGHT - TOOTH GEARS)

85-86-86RS

1a - 0677

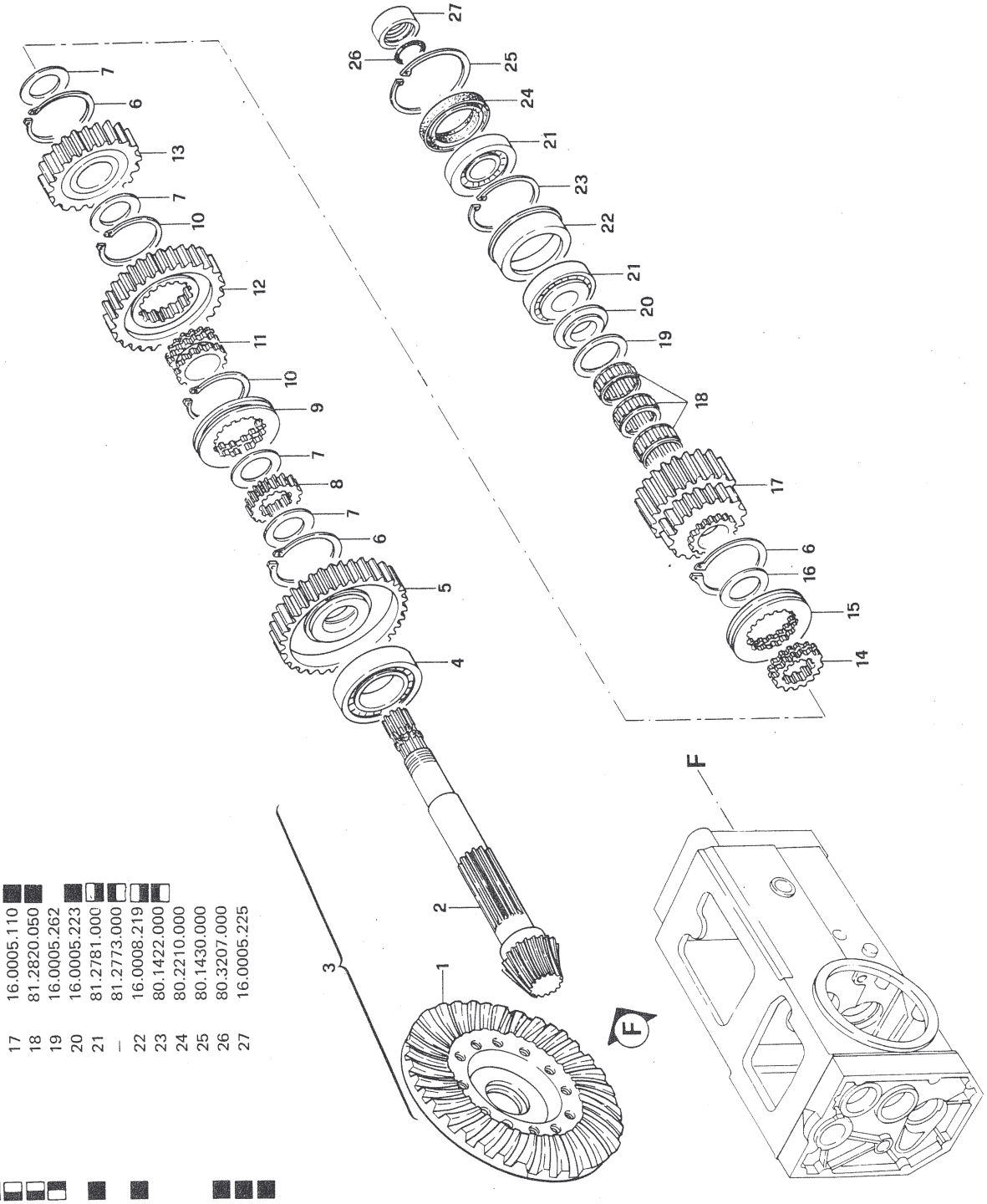

No.	ORDIN.
14	16.0005.211
15	16.0005.212
16	16.0005.221
17	16.0005.110
18	81.2820.050
19	16.0005.262
20	16.0005.223
21	81.2781.000
—	81.2773.000
22	16.0008.219
23	80.1422.000
24	80.2210.000
25	80.1430.000
26	80.3207.000
27	16.0005.225

No.	ORDIN.
1	16.0010.100
—	16.0010.110
2	16.0005.133
—	16.0005.114
3	16.0005.287
—	16.0005.288
4	81.2959.010
5	16.0005.115
6	80.1382.000
7	16.0005.220
8	16.0005.211
9	16.0005.212
10	80.1389.000
11	16.0005.118
12	16.0005.116
13	16.0005.117

T.P.S. 4-108

Segnalazioni di validità

155.582

155.583

C1306B

Downloaded from www.Manualslib.com manuals search engine

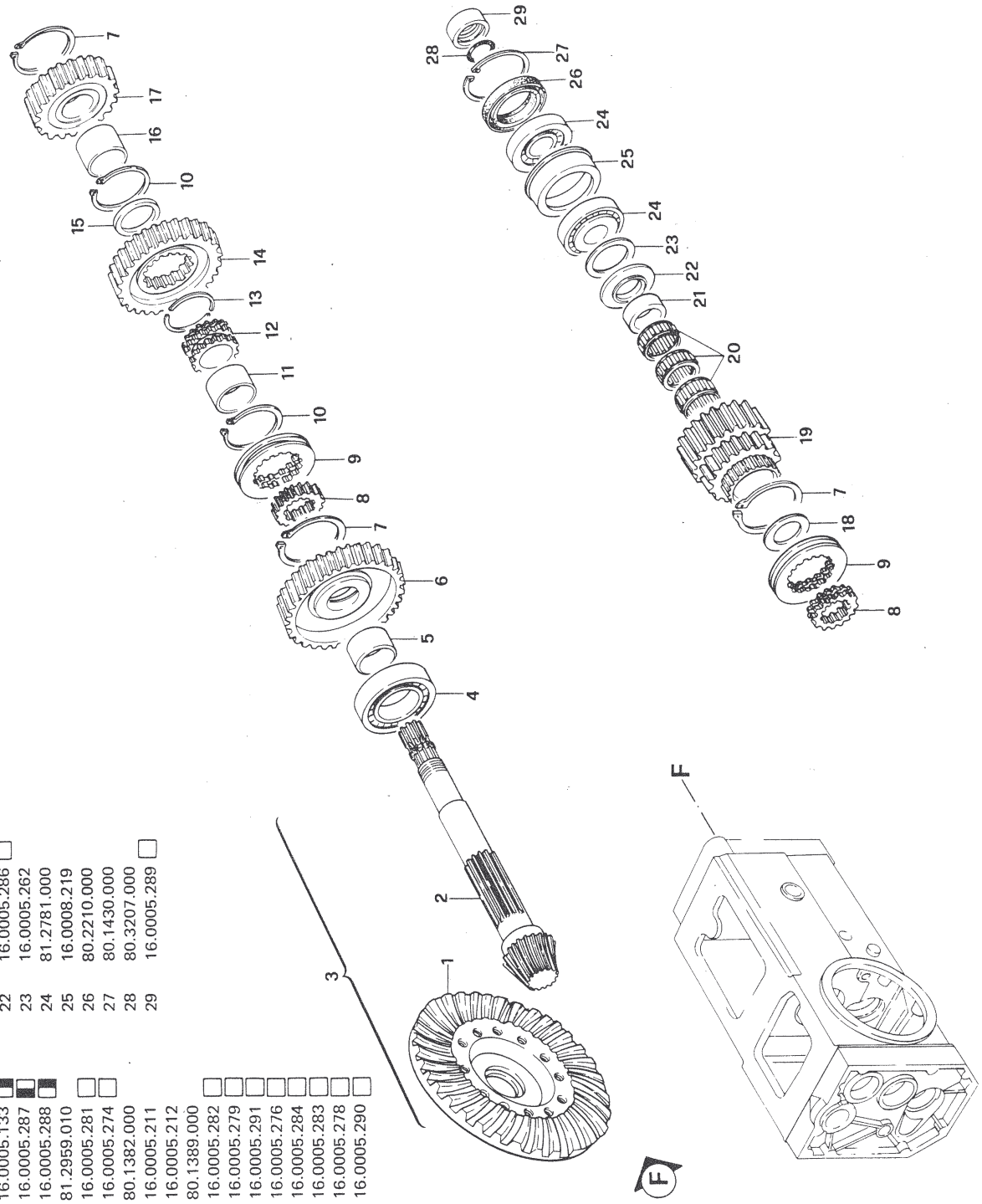

No.	ORDIN.	
1	16.0016.110	
—	16.0010.100	
2	16.0005.114	
—	16.0005.133	
3	16.0005.287	
—	16.0005.288	
4	81.2959.010	
5	16.0005.281	
6	16.0005.274	
7	80.1382.000	
8	16.0005.211	
9	16.0005.212	
10	80.1389.000	
11	16.0005.282	
12	16.0005.279	
13	16.0005.291	
14	16.0005.276	
15	16.0005.284	
16	16.0005.283	
17	16.0005.278	
18	16.0005.290	
19	14.0005.280	
20	81.2921.050	
21	80.4464.000	
22	16.0005.286	
23	16.0005.262	
24	81.2781.000	
25	16.0008.219	
26	80.2210.000	
27	80.1430.000	
28	80.3207.000	
29	16.0005.289	

T.P.S. 4-108

Downloaded from www.Manualslib.com manuals search engine

	No. ORDIN.
1	16.0005.201
2	80.1229.000
3	16.0005.109
4	81.2656.000
5	85.0100.000 (0,2 mm)
—	85.0100.010 (0,3 mm)
—	85.0100.020 (0,5 mm)
6	80.1368.000
7	81.2767.010
8	16.0005.210 ■
9	16.0005.209 ■
10	16.0005.208 ■
11	80.1400.000
12	85.0057,000 (0,2 mm)
—	85.0057.010 (0,3 mm)
—	85.0057.020 (0,5 mm)
13	16.0005,207
14	80.1210.000
15	84.4576.000
16	81.2731.000
17	16.0005.111
18	16.0005.113
19	16.0005.214
20	16.0005.112
21	16.0005.213
22	81.2780.000
23	11.0008.225
24	85.0130.000 (0,2 mm)
—	85.0130.010 (0,3 mm)
—	85.0130.020 (0,5 mm)
25	80.1422.000
26	80.2127.000

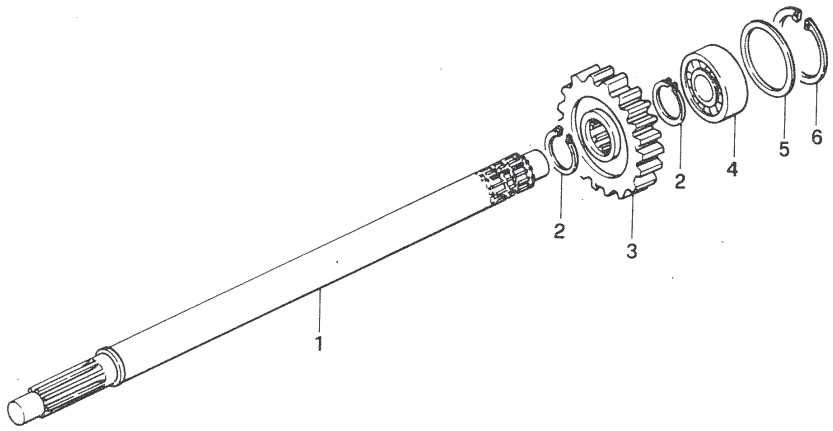

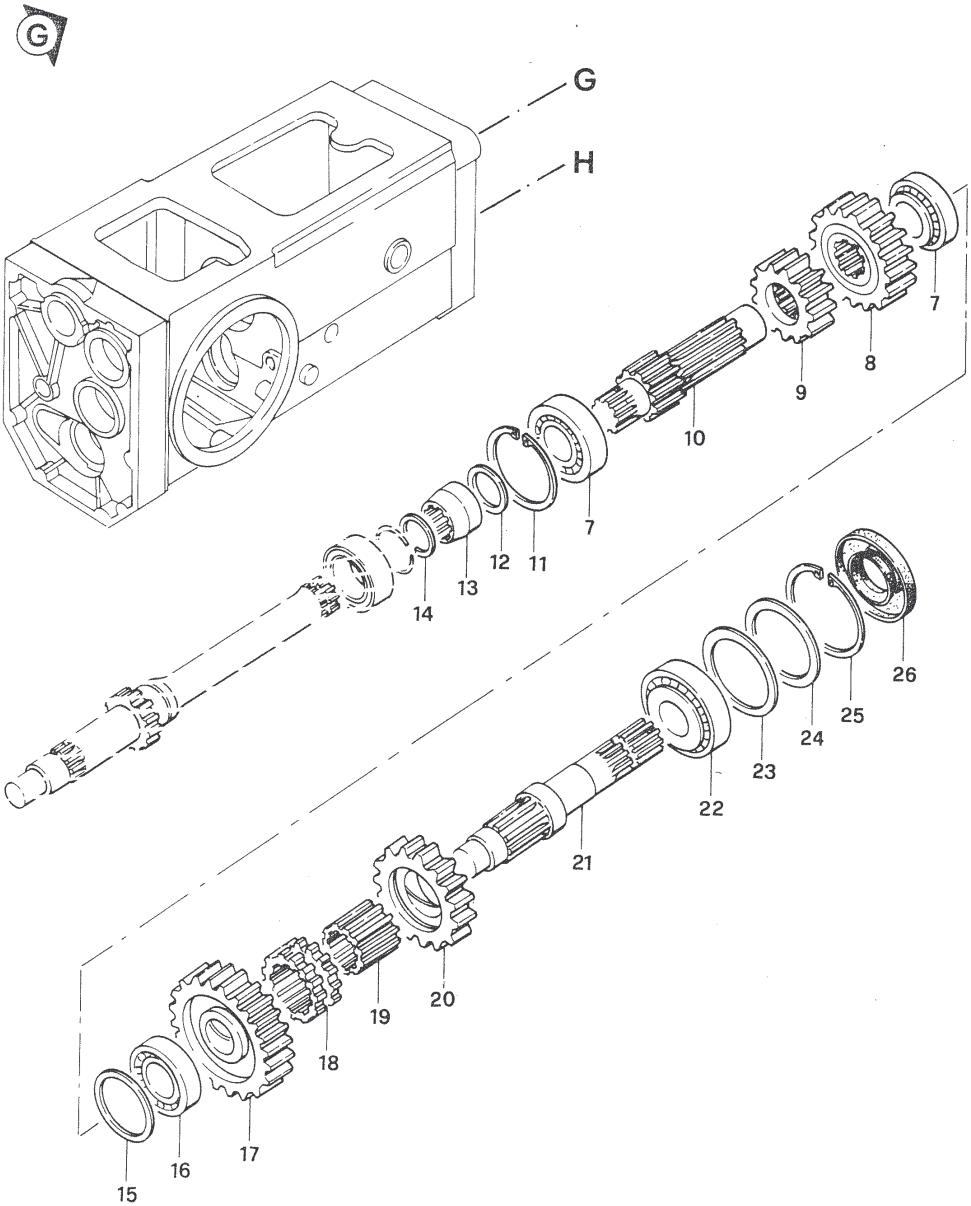

Downloaded from www.Manualslib.com manuals search engine

	No. ORDIN.
1	16.0005.201
2	80.1229.000
3	16.0005.109
4	81.2656.000
5	85.0100.000 (0,2 mm)
—	85.0100.010 (0,3 mm)
—	85.0100.020 (0,5 mm)
6	80.1368.000
7	81.2767.010
8	16.0005.277 □
9	16.0005.275 □
10	16.0005.273 □
11	80.1400.000
12	85.0057.000 (0,2 mm)
—	85.0057.010 (0,3 mm)
—	85.0057.020 (0,5 mm)
13	16.0005.207
14	80.1210.000
15	84.4576.000
16	81.2731.000
17	16.0005.111
18	16.0005.113
19	16.0005.214
20	16.0005.112
21	16.0005.213
22	81.2780.000
23	11.0008.225
24	85.0130.000 (0,2 mm)
—	85.0130.010 (0,3 mm)
—	85.0130.020 (0,5 mm)
25	80.1422.000
26	80.2127.010

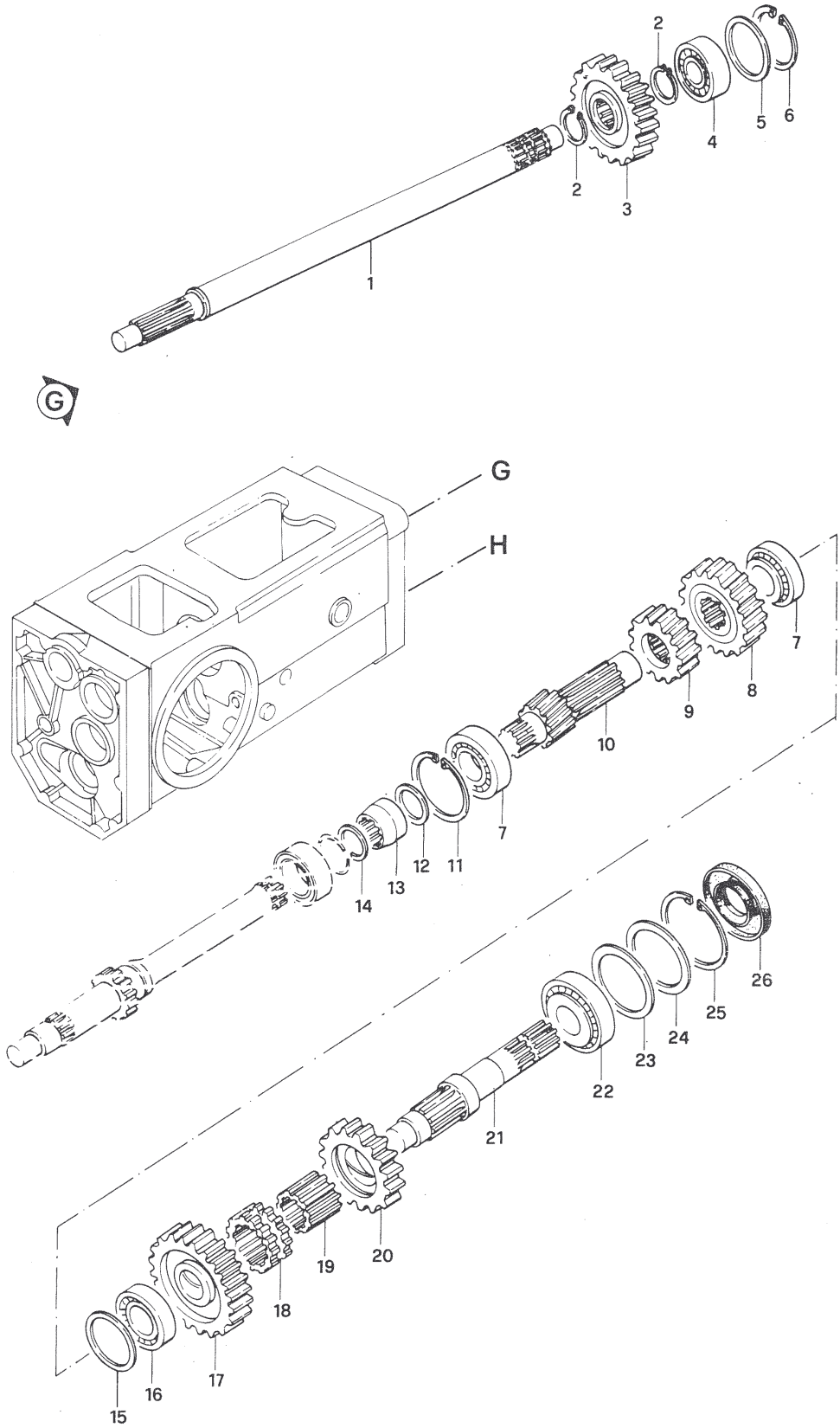

T.P.S. 4-108

Downloaded from www.Manualslib.com manuals search engine

	No. ORDIN.
1	83.7553.000
2	15.0035.900
3	86.2555.000
4	84.3643.050
5	16.0005.014
6	83.1375.010
7	15.0035.216
8	16.0005.120
9	16.0005.900
10	16.0005.292
11	16.0005.250
12	80.3183.000
13	16.0005.228
14	01.0001.319
15	16.0005.243
16	84.7432.000
17	16.0005.258
18	47.1560.048
19	83.1020.000
20	16.0005.231

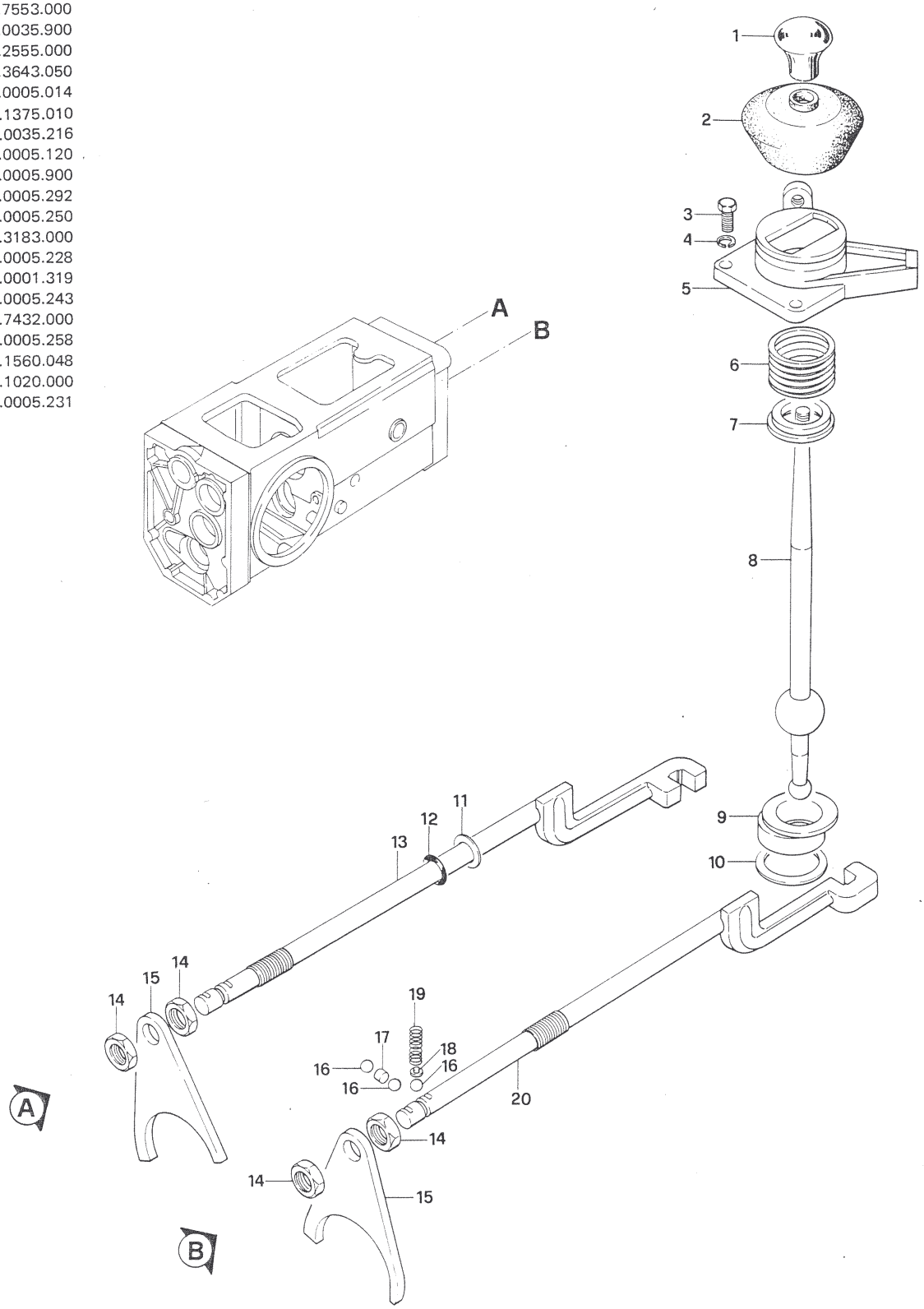

Downloaded from www.Manualslib.com manuals search engine

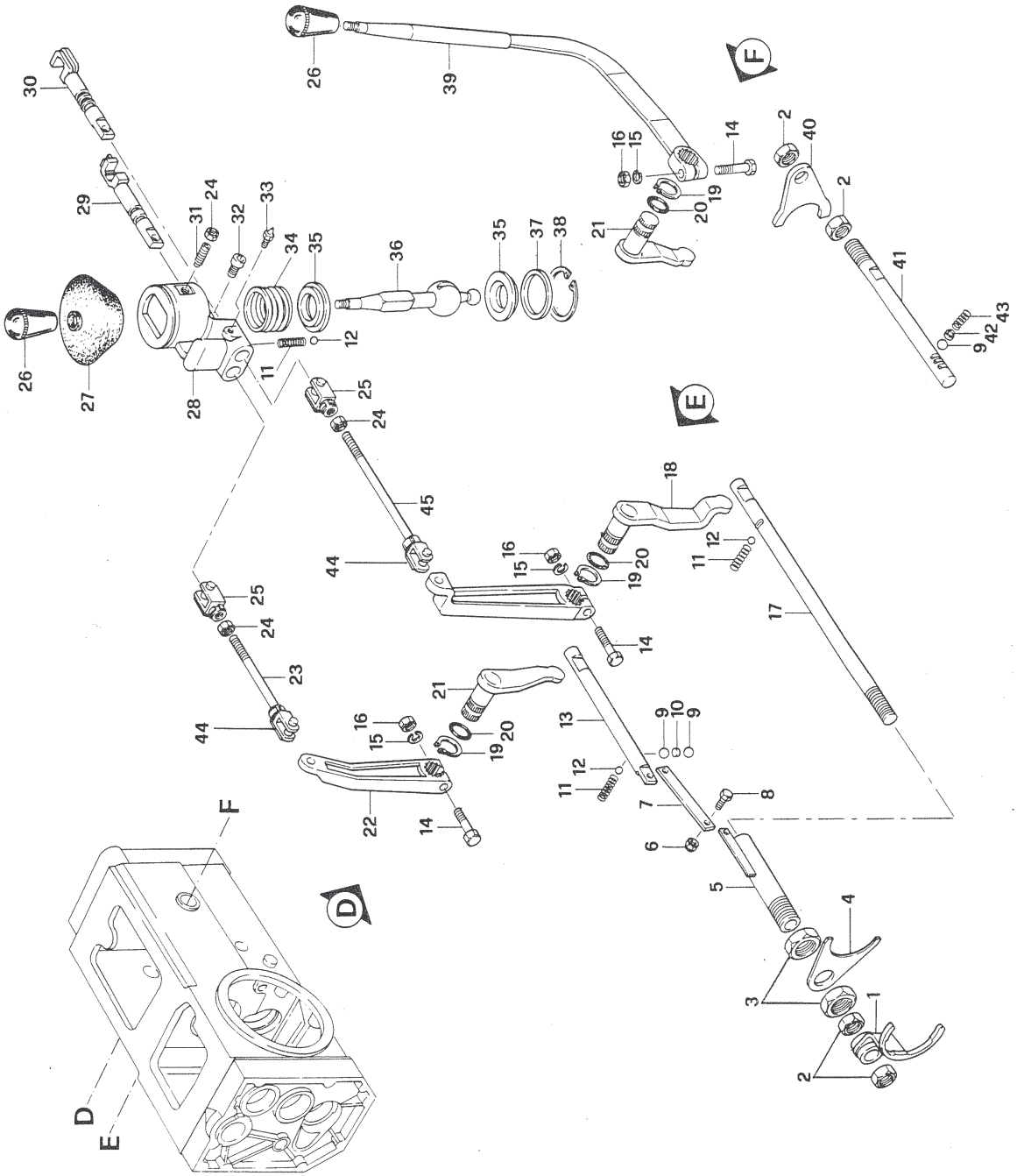

No.	ORDIN.
1	16.0005.126
2	01.0001.319
3	16.0005.261
4	16.0005.242
5	16.0005.264
6	81.4549.000
7	16.0005.240
8	86.2159.000
9	84.7432.000
10	16.0005.258
11	83.1001.000
12	84.7416.000
13	16.0005.235
14	86.2845.000
15	84.3643.050
16	81.4579.000
17	16.0005.234
18	16.0005.266
19	80.1155.000
20	80.3072.020
21	16.0005.268
22	16.0005.131
23	16.0005.253
24	81.4573.000
25	86.0060.000
26	83.7537.050
27	15.0035.900
28	16.0005.016
29	16.0005.128
30	16.0005.127
31	86.2685.000
32	86.3172.000
33	82.6016.000
34	83.1375.000
35	15.0035.216
36	16.0005.129
37	16.0005.252
38	80.1368.000
39	16.0005.121
40	16.0005.244
41	16.0005.236
42	47.1560.048
43	83.1020.000
44	86.0058.020
45	16.0005.255

Downloaded from www.Manualslib.com manuals search engine

42045 LUZZARA (RE) TEL. (0522) 835524 (5 LINEE)

	No. ORDIN.		No. ORDIN.		No. ORDIN.		No. ORDIN.
1	81.4643.000	14	16.0010.208	26	16.0010.010	40	83.1367.010
2	84.3755.050	15	16.0010.201	27	81.2939.000	41	11.0011.209
3	11.0011.107	16	80.0064.000	28	80.1430.000	42	86.0030.000
4	11.0013.207	17	81.2973.000	29	80.2239.060	43	85.7256.090
5	86.3452.000	18	85.0160.000 (0,2 mm)	30	80.1297.000	44	86.6485.038
6	16.0010.110 ■	—	85.0161.000 (0,3 mm)	31	16.0010.106	45	16.0010.209
—	16.0010.100 □	—	85.0162.000 (0,5 mm)	32	84.3921.020		
7	16.0010.205	19	80.1433.000	33	86.4192.000		
8	16.0010.105	20	16.0010.102	34	01.0001.078		
9	16.0010.202	21	16.0010.108	35	01.0001.079		
10	16.0010.104	22	02.0010.902	36	16.0010.109		
11	16.0010.204	23	84.3755.050	37	85.1191.000		
12	16.0010.200	24	86.3322.000	38	85.1055.000		
13	16.0010.103	25	16.0010.203	39	11.0011.207		

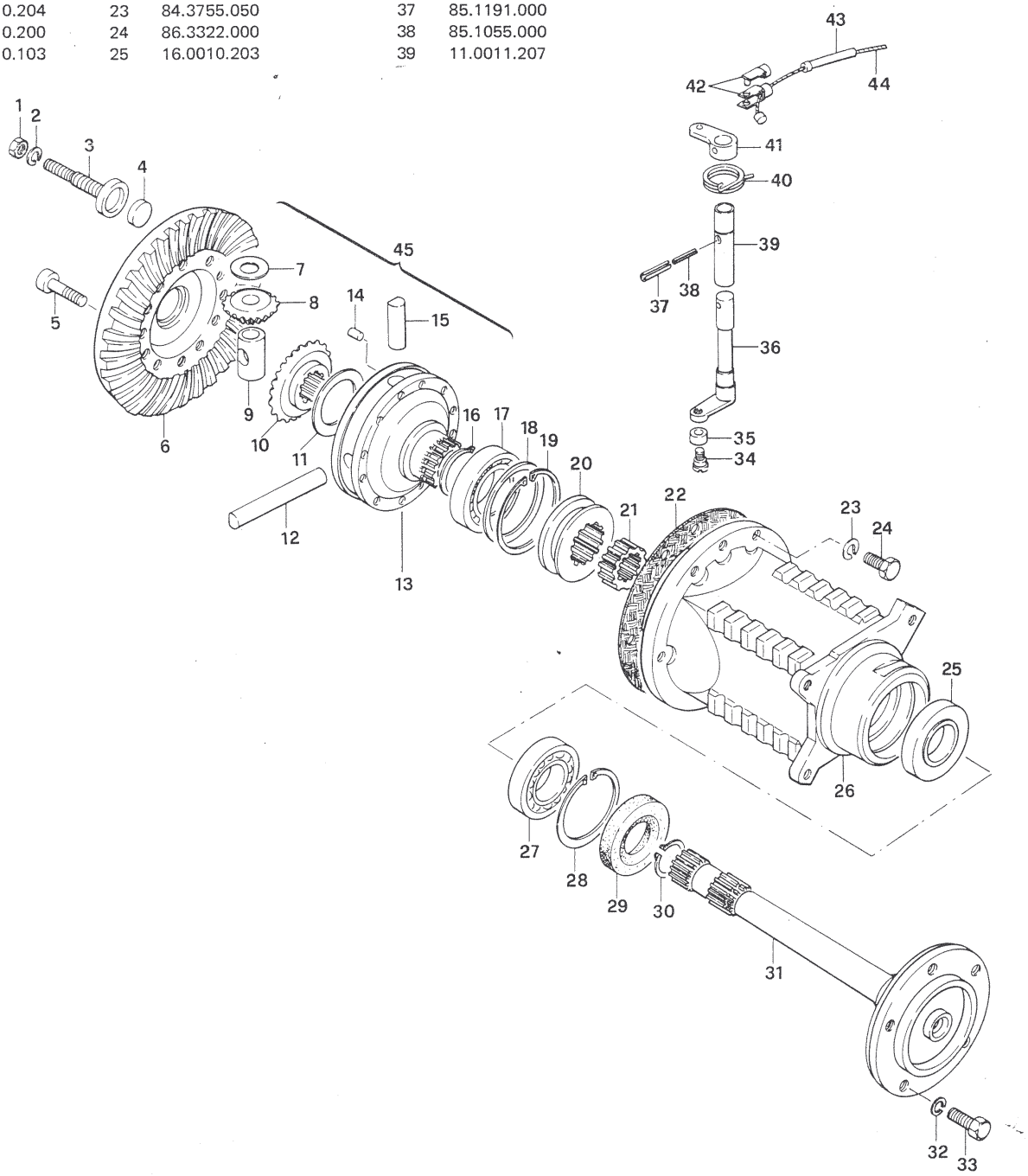

T.P.S. 4-108

Downloaded from www.Manualslib.com manuals search engine

42045 LUZZARA (RE) TEL. (0522) 835524 (5 LINEE)

	No. ORDIN.		No. ORDIN.		No. ORDIN.
1	85.2765.000	21	16.0008.220	37	85.0114.000 (0,2 mm)
2	80.1368.000	22	81.2870.000	—	85.0114.010 (0,3 mm)
3	81.2659.000	23	16.0008.219	—	85.0114.020 (0,5 mm)
4	16.0008.204	24	81.2781.000	38	81.2767.000
5	16.0008.210	25	80.1430.000	39	16.0008.212
6	81.2869.000	26	80.2210.000	40	16.0008.206
7	85.0140.000 (0,2 mm)	27	80.3207.000	41	16.0008.209
—	85.0140.010 (0,3 mm)	28	16.0005.225 □	42	16.0008.211
—	85.0140.020 (0,5 mm)	—	16.0005.289 ■	43	81.2846.000
8	80.1428.000	29	82.8471.000	44	80.1422.000
9	16.0008.100 □	30	16.0008.102	45	80.2162.000
—	16.0008.101 ■	31	86.2259.000		
10	81.2859.000	32	84.3571.000		
11	16.0008.221	33	81.4543.000		
12	11.0008.225	34	80.2125.050		
13	16.0008.214	35	80.1400.000		
14	80.3217.040	36	16.0008.213		
15	16.0008.208				
16	84.7416.000				
17	83.1002.000				
18	16.0008.207				
19	81.2922.000				
20	16.0008.205				

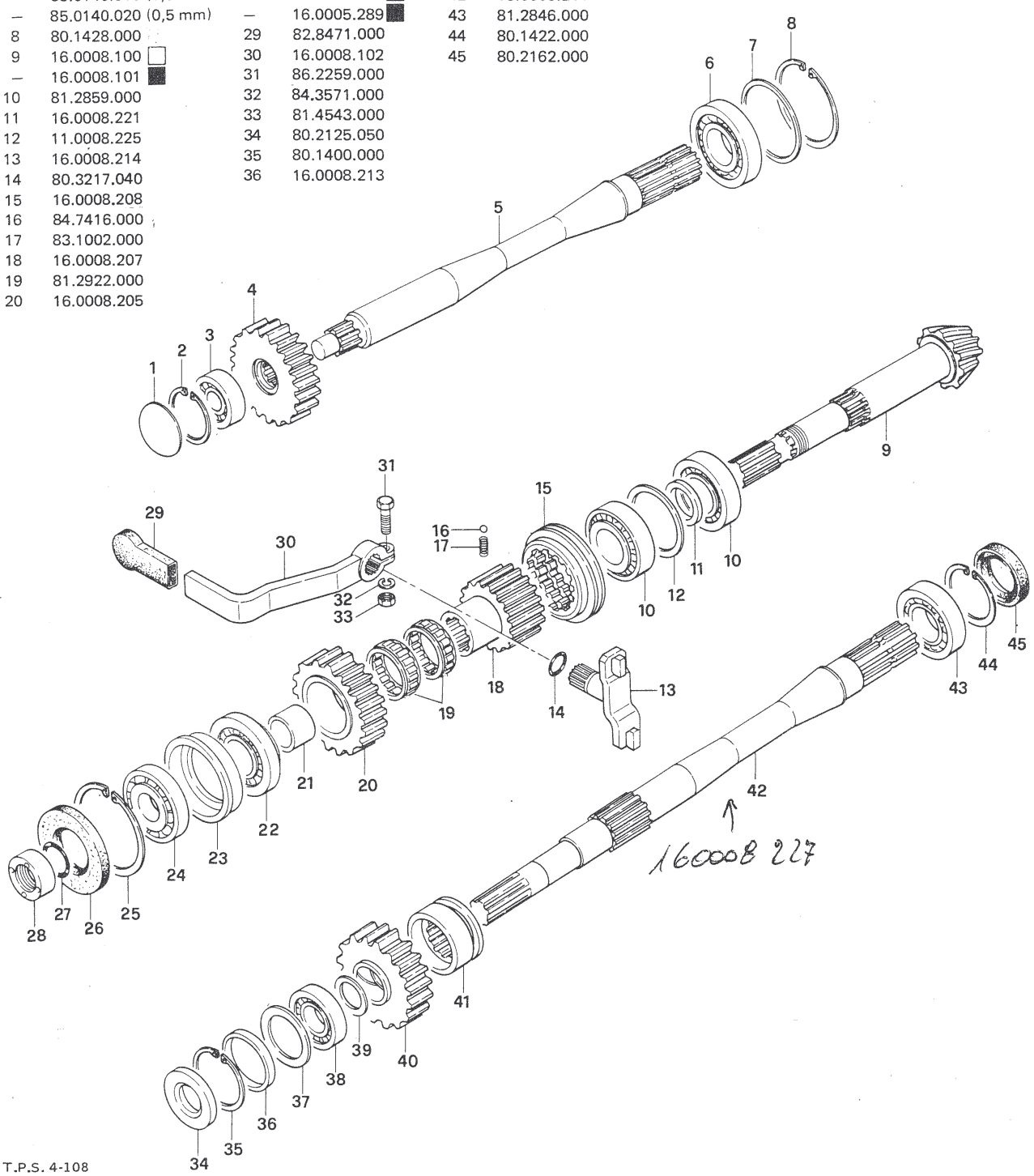

T.P.S. 4-108

Downloaded from www.Manualslib.com manuals search engine

42045 LUZZARA (RE) TEL. (0522) 835524 (5 LINEE)

	No. ORDIN.		No. ORDIN.		No. ORDIN.
1	80.0064.000	16	86.3452.000	30	16.0010.203
2	16.0010.103	17	81.2973.000	31	81.2939.000
3	16.0010.204	18	85.0160.000 (0,2 mm)	32	80.1430.000
4	16.0010.104	—	85.0161.000 (0,3 mm)	33	80.2239.060
5	16.0010.202	—	85.0162.000 (0,5 mm)	34	80.1297.000
6	16.0010.209	19	80.1433.000	35	16.0010.106
7	16.0010.201	20	16.0010.102	36	84.3921.020
8	16.0010.200	21	16.0010.108	37	86.4192.000
9	16.0010.205	22	83.1346.000		
10	16.0010.105	23	16.0013.201		
11	11.0013.207	24	80.1130.000		
12	11.0011.107	25	01.0001.079		
13	84.3755.050	26	01.0001.078		
14	81.4643.000	27	02.0010.902		
15	16.0010.101 □	28	16.0010.010		
—	16.0013.100 ■	29	86.3322.000		

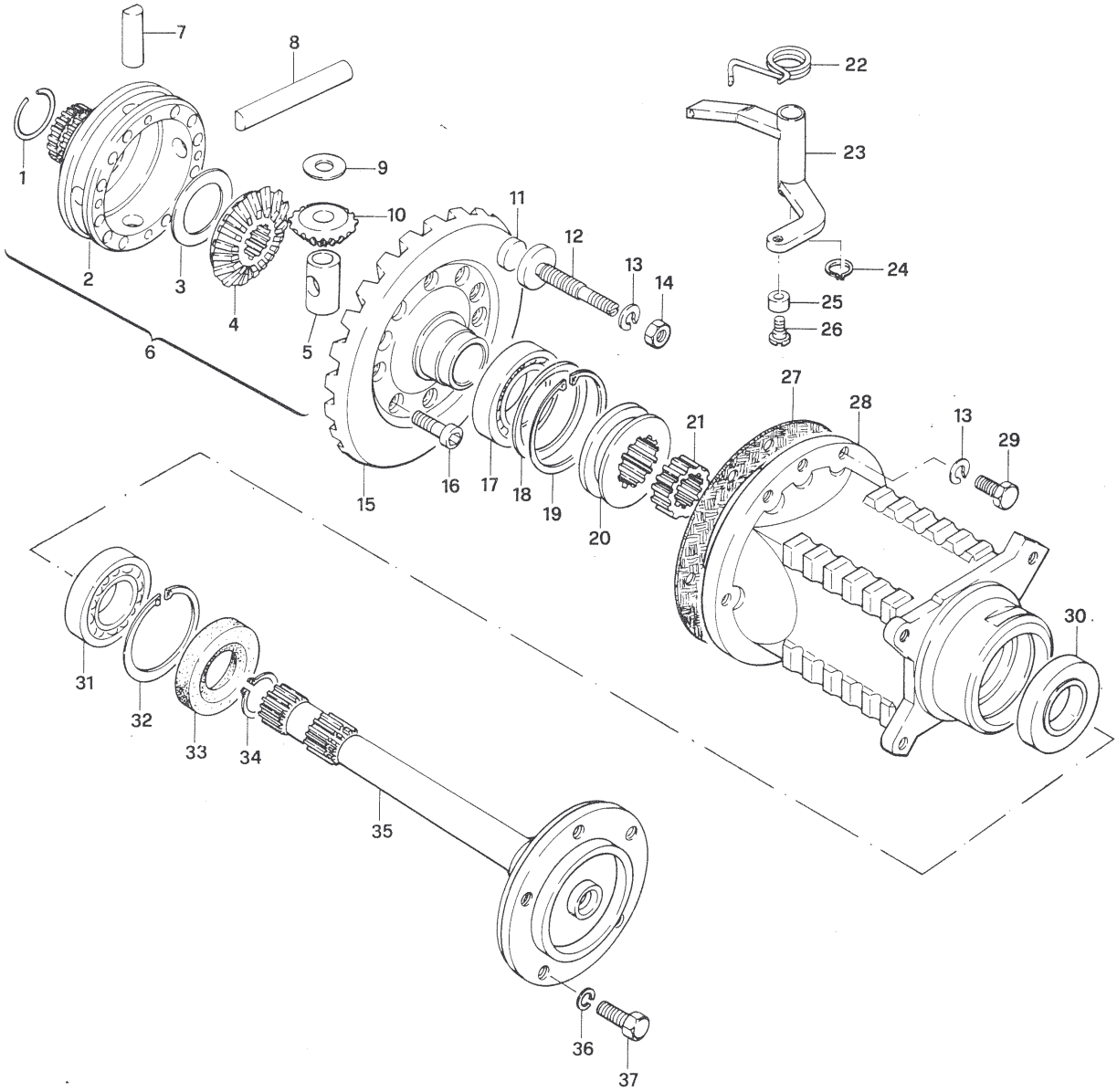

T.P.S. 4-108

Downloaded from www.Manualslib.com manuals search engine

FERRARI
42045 LUZZARA (RE) TEL. (0522) 835524 (5 LINEE)

SCATOLA CENTRALE
INTERMEDIATE HOUSING
CARTER MEDIAN
MITTLERE
CAJA INTERMEDIA

No. ORDIN. / *PART No.* / No. ORDIN. / *BESTELL No.* / No. REFERENCIA	
1	82.1070.000
2	16.0012.202
3	81.3000.000
4	85.0133.000
5	16.0012.201
6	81.4787.000
7	84.4084.000
8	83.8745.000
9	16.0012.010
10	84.3643.050
11	86.2853.000
12	16.0012.211
13	16.0012.212
14	16.0012.213
15	82.6016.000
16	80.1232.000
17	16.0012.203
18	16.0012.215
19	80.1175.000
20	82.6041.000
21	16.0012.218
22	16.0012.217
23	82.6042.000
24	16.0012.216
25	16.0012.204
26	81.4917.000
27	84.4454.000
28	85.0057.040
29	81.2777.000
30	80.1422.000
31	16.0012.200
32	85.2797.000
33	16.0012.013
34	80.3291.000
35	16.0012.102
36	16.0012.101
37	16.0012.100
38	84.7470.000
39	82.6038.000
40	86.2593.000
41	81.4570.010
42	81.2849.000
43	16.0012.205
44	80.1400.000 ○ ■
—	80.1400.000 ●
45	81.2836.000
46	16.0012.206
47	16.0012.012
48	86.4295.050
49	84.3921.020
50	86.4007.000 ○ □
—	86.4012.000 ○ ■
—	86.4012.000 ●
51	16.0012.214
52	16.0012.220 ○ ■
—	16.0012.220 ●
53	16.0012.221 ○ ■
—	16.0012.221 ●
54	80.1308.000 ○ ■
—	80.1308.000 ●
55	86.2853.000 ○ □
56	84.3643.050 ○ □

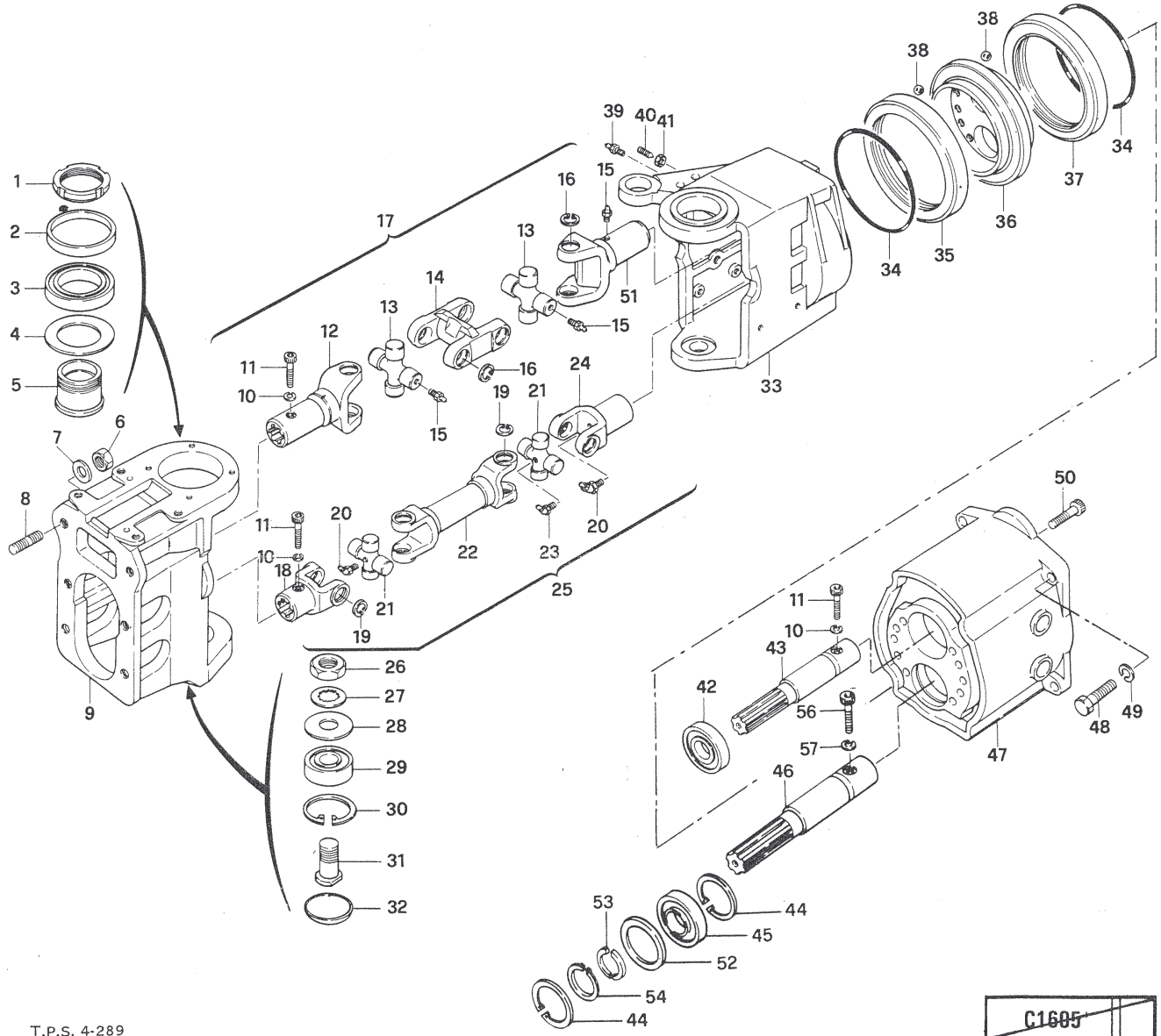

T.P.S. 4-289

Segnalazioni di validità
Usage code
Signalisations de validité
Gultigkeitsvermerk
Indicaciones de validez

□ → 161.940 ■ 161.941 →

Downloaded from www.Manualslib.com manuals search engine

	No. ORDIN.
1	16.0008.223
2	80.3057.000
3	16.0008.010
4	85.2628.000
5	85.3512.000
6	86.3703.000
7	16.0008.900
8	16.0008.217
9	16.0008.226
10	09.0011.910

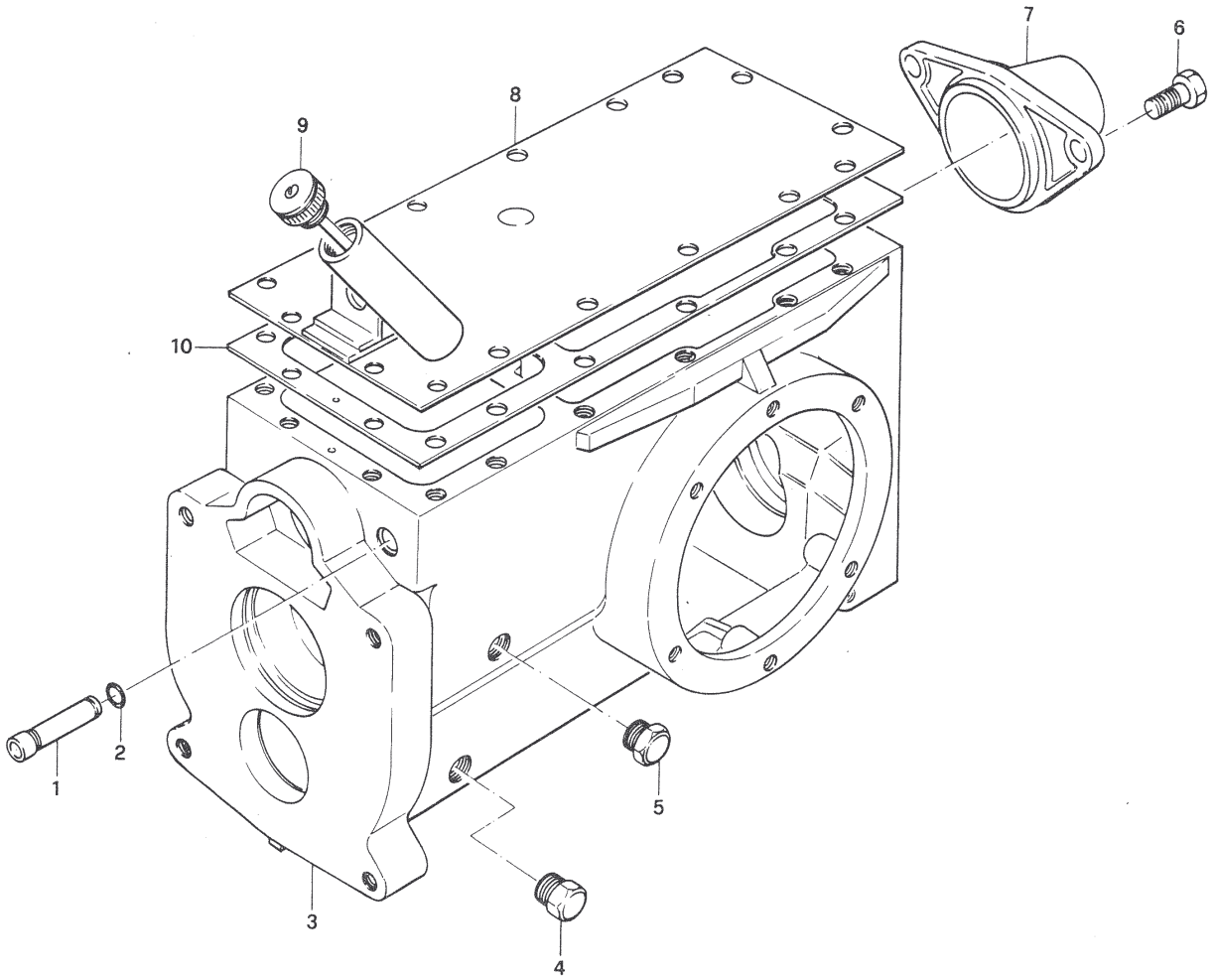

Downloaded from www.Manualslib.com manuals search engine

FERRARI

42045 LUZZARA (RE) TEL. (0522) 835524 (5 LINEE)

FRENI IDRAULICI ANTERIORI
FRONT HYDRAULIC BRAKES
FREINS HYDRAULIQUES ANTERIEURS
VORDERE HYDRAULISCHE BREMSEN

◐ ● ○

75RS-85-86

1a-0177	2a-0677

	No. ORDIN.
1	11.0021.915
2	11.0021.279
3	80.3253.000
4	81.7505.000
5	11.0021.902
6	11.0021.903
7	16.0022.901 ○
–	11.0021.909 ◐
–	16.0021.902 ● □
–	16.0021.926 ● ■
8	86.2100.000 ◐
9	84.3570.000 ◐
10	81.4780.000 ◐
11	11.0021.280 ◐
12	11.0021.904 ◐
13	84.3102.000 ◐
14	84.3771.000 ◐
15	82.3140.005
16	86.3584.000 ◐
17	86.3520.000 ◐
–	86.3358.000 ● ○
18	82.3140.002
19	82.3140.004
20	82.3140.007
21	82.3140.008
22	82.3140.001
23	82.3140.006
24	82.3140.003
25	82.3140.010 = 16002.1220
26	82.3875.000
27	84.3994.000
28	86.4192.000
29	82.5806.000 ◐ ○
–	82.5807.000 ● □
–	82.5806.000 ● ■
30	82.5423.020
31	11.0021.907 ◐ ○
–	16.0021.900 ● □
–	11.0021.907 ● ■
32	84.3798.00
33	86.3448.000
34	16.0021.925 ● ■
–	16.0021.901 ● □
–	11.0021.908 ◐
–	16.0022.900 ○
35	11.0029.263 ◐ ○
–	16.0021.928 ● □
–	11.0029.263 ● ■
36	83.7102.000 ○ ◐
–	83.7103.000 ● □
–	83.7102.000 ● ■
37	83.7102.020
38	83.7102.030
39	81.7505.000
40	11.0021.906
41	11.0021.278 ◐
–	16.0021.200 ● ○
42	16.0021.923 ● ■
–	11.0021.910 ◐
–	16.0021.903 ● □
–	16.0021.923 ○
43	86.0091.020 ● ○
–	86.0090.020 ◐
44	81.4643.000
45	86.0091.010 ● ○
–	86.0090.010 ◐

	No. ORDIN.
46	86.0091.000 ● ○
–	86.0090.000 ◐
47	82.6040.000
48	85.1267.000 ● ○ ◨
–	85.1267.000 ◐ ▬
49	16.0032.259 ● ■
–	16.0032.219 ● □
–	11.0032.410 ◐ ◪
–	11.0032.454 ◐ ◪
–	16.0032.259 ○

	No. ORDIN.
50	83.1335.000 ● ○ ◨
–	83.1335.000 ◐ ▬
51	86.3153.000 ◐ ▬
	86.3153.000 ● ○
52	84.3817.000 ◐ ▬
–	84.3817.000 ● ○
53	11.0032.411 ◐ ▬
54	83.1139.000 ◐ ▬
–	83.1139.000 ● ○ ◨
55	11.0032.412 ◐ ▬
56	82.3140.000

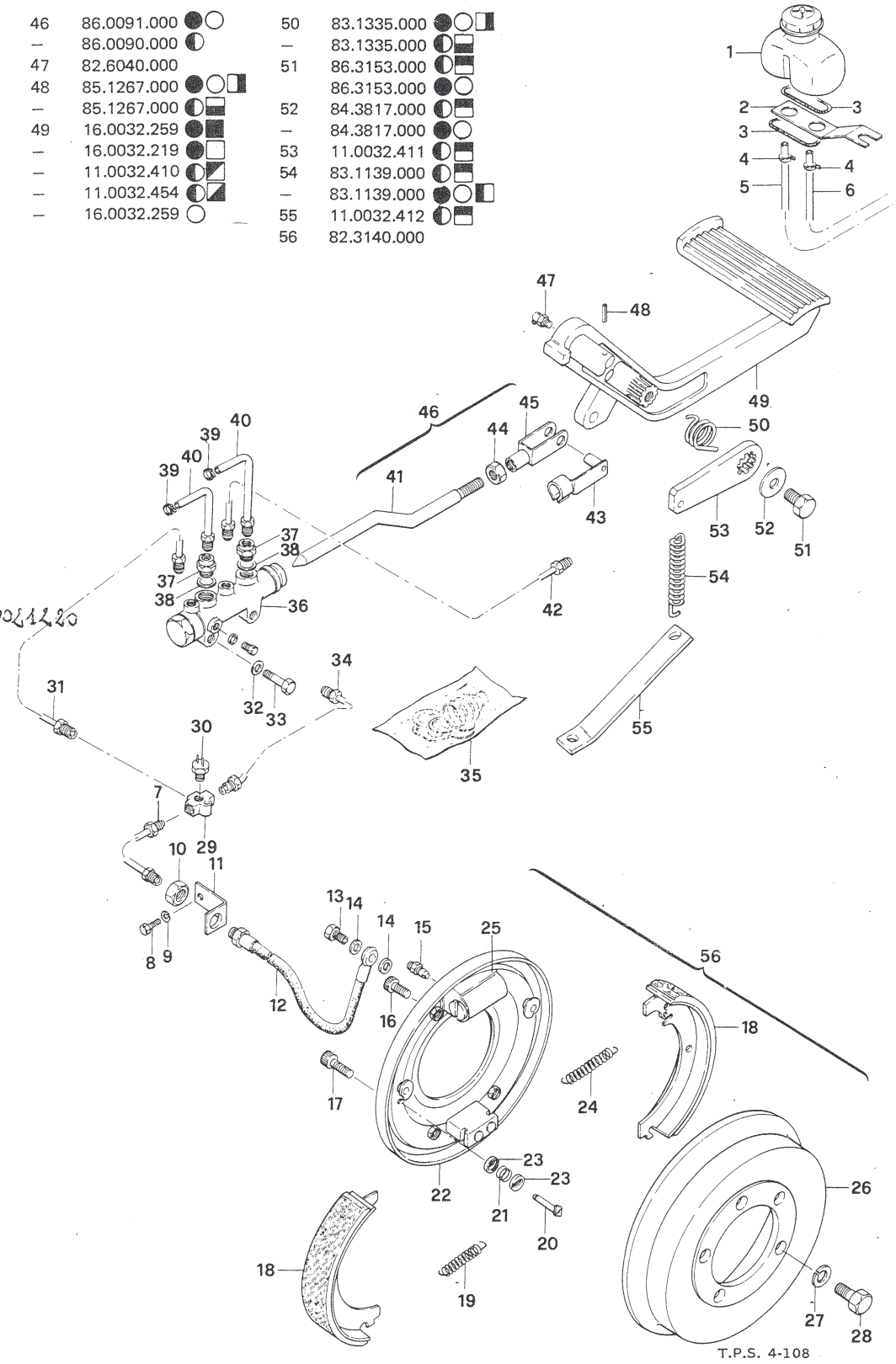

Segnalazioni di validità
Usage code
Signalisations de validité
Gultigkeitsvermerk
Indicaciones de validez

~~C2107A~~	
C2107A	1

Downloaded from www.Manualslib.com manuals search engine

	No. ORDIN.
1	86.2785.000
2	84.3643.060 ●○
—	84.3667.000 ◐
3	82.3250.000
4	81.4624.000
5	85.8025.030
6	85.5173.000
7	86.1932.000
8	84.3561.000
9	11.0029.264
10	82.3140.011
11	82.3140.012
12	82.3140.013
13	82.3140.011
14	16.0022.902 ○
—	16.0021.905 ●
—	11.0021.912 ◐
15	86.2255.000
16	82.5805.000
17	11.0021.913 ◐
—	16.0021.906 ●
—	16.0022.903 ○
18	11.0021.911
19	81.4780.000
20	84.4051.000
21	16.0021.924 ○
—	16.0021.924 ●■
—	16.0021.904 ●□
—	11.0021.905 ◐
22	86.3358.000
23	84.3755.050
24	82.3140.005
25	82.3141.000
—	82.3142.000
26	82.3141.001
—	82.3141.007

	No. ORDIN.
27	82.3140.002
28	82.3140.004
29	82.3140.006
30	82.3140.008
31	82.3140.007
32	82.3875.000
33	84.3994.000
34	86.4192.000
35	81.3141.002
—	81.3141.004
36	82.3141.006
37	82.3141.003
—	82.3141.005
38	82.3140.003
39	80.1050.000

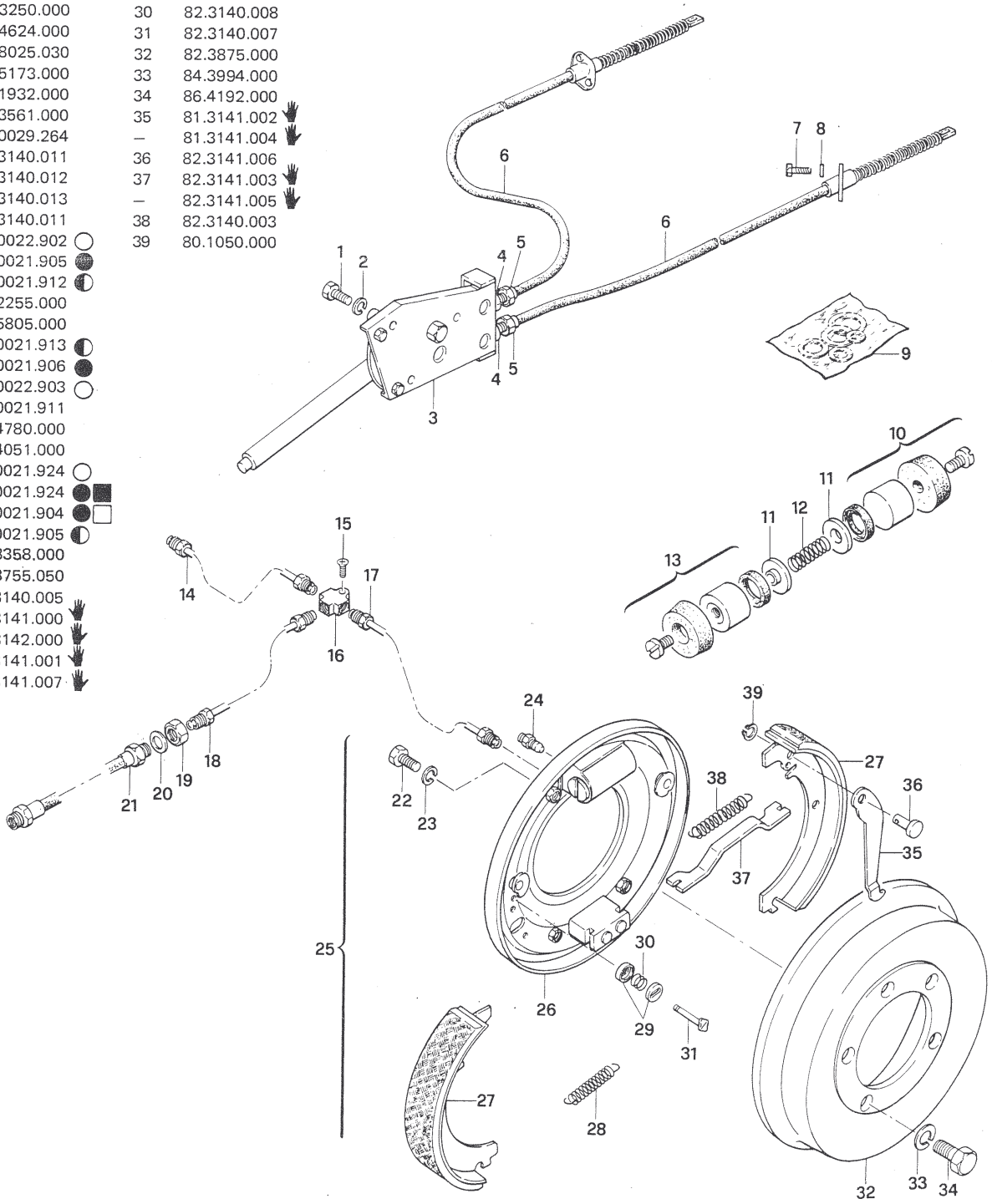

Downloaded from www.Manualslib.com manuals search engine

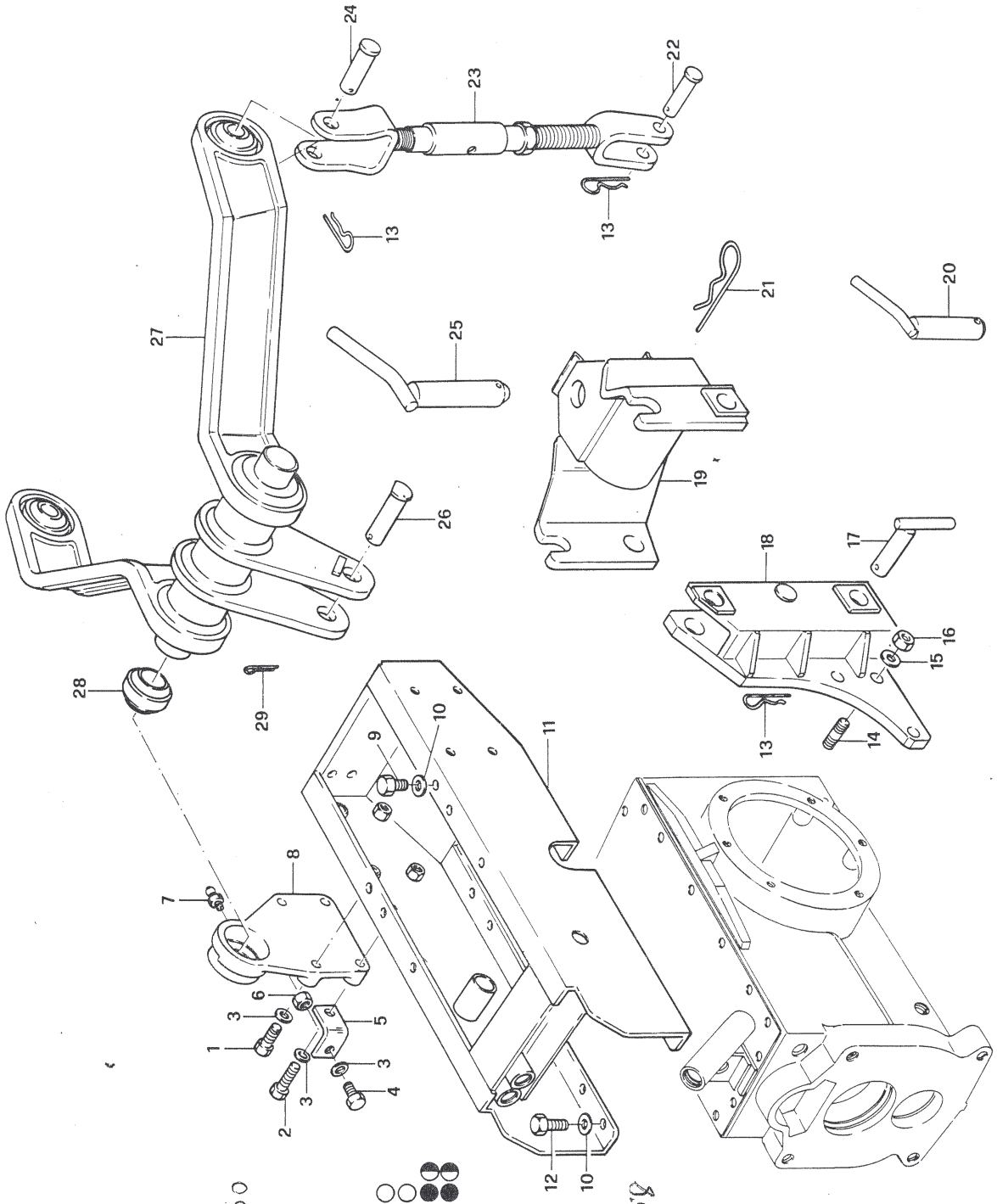

No.	ORDIN.	
1	86.3950.000	
2	86.3997.000	
3	84.3843.050	
4	86.3254.000	
5	11.0032.429	
6	81.4644.000	
7	82.6038.000	
8	16.0031.011 SN	
–	16.0031.010 DS	
9	86.3253.000	
10	84.3798.000	
11	16.0031.~~209~~ 260	
12	86.3205.000	
13	85.1486.000	
14	83.8697.000	
15	84.3921.020	
16	81.4752.000	
17	80.8039.085	
18	16.0031.204 DS	○
–	16.0031.205 SN	○
–	16.0028.205 DS	◑
–	16.0028.206 SN	●
19	16.0028.202	
20	80.8040.000 *	
21	85.1497.000	
22	83.5679.000	
23	16.0031.230	
24	83.5768.000	
25	80.8060.000	
26	16.0031.208	
27	16.0031.~~248~~ 258	
28	81.1970.000	
29	81.0625.000	

T.P.S. 4-108

Segnalazioni di validitá

* A RICHIESTA

C2206A

Downloaded from www.Manualslib.com manuals search engine

FERRARI
42045 LUZZARA (RE) TEL. (0522) 835524 (5 LINEE)

ATTACCO SOLLEVATORE A TRE PUNTI
IMPLEMENT LIFTER – THREE-POINT HITCH

○ ● ◑
85-86-86RS

1a - 0677

	No. ORDIN.
1	16.0031.234
2	86.3300.000
3	16.0031.255
4	86.3700.000
5	85.1486.000
6	11.0028.211 - 160028 223
7	83.5769.000
8	16.0031.241 DS ○
–	16.0031.242 SN ○
–	16.0028.200 DS ● ◑
–	16.0028.201 SN ● ◑
9	81.4704.000 ○
10	80.8039.095
11	16.0031.220 DS ○
–	16.0031.221 SN ○
–	16.0028.212 ● ◑
12	81.4838.000
13	11.0031.253
14	80.8039.075
15	16.0028.210 DS ● ◑
–	16.0028.211 SN ● ◑
–	16.0031.200 DS ○
–	16.0031.201 SN ○
16	84.3843.050
17	86.4172.020
18	86.4172.030 ○

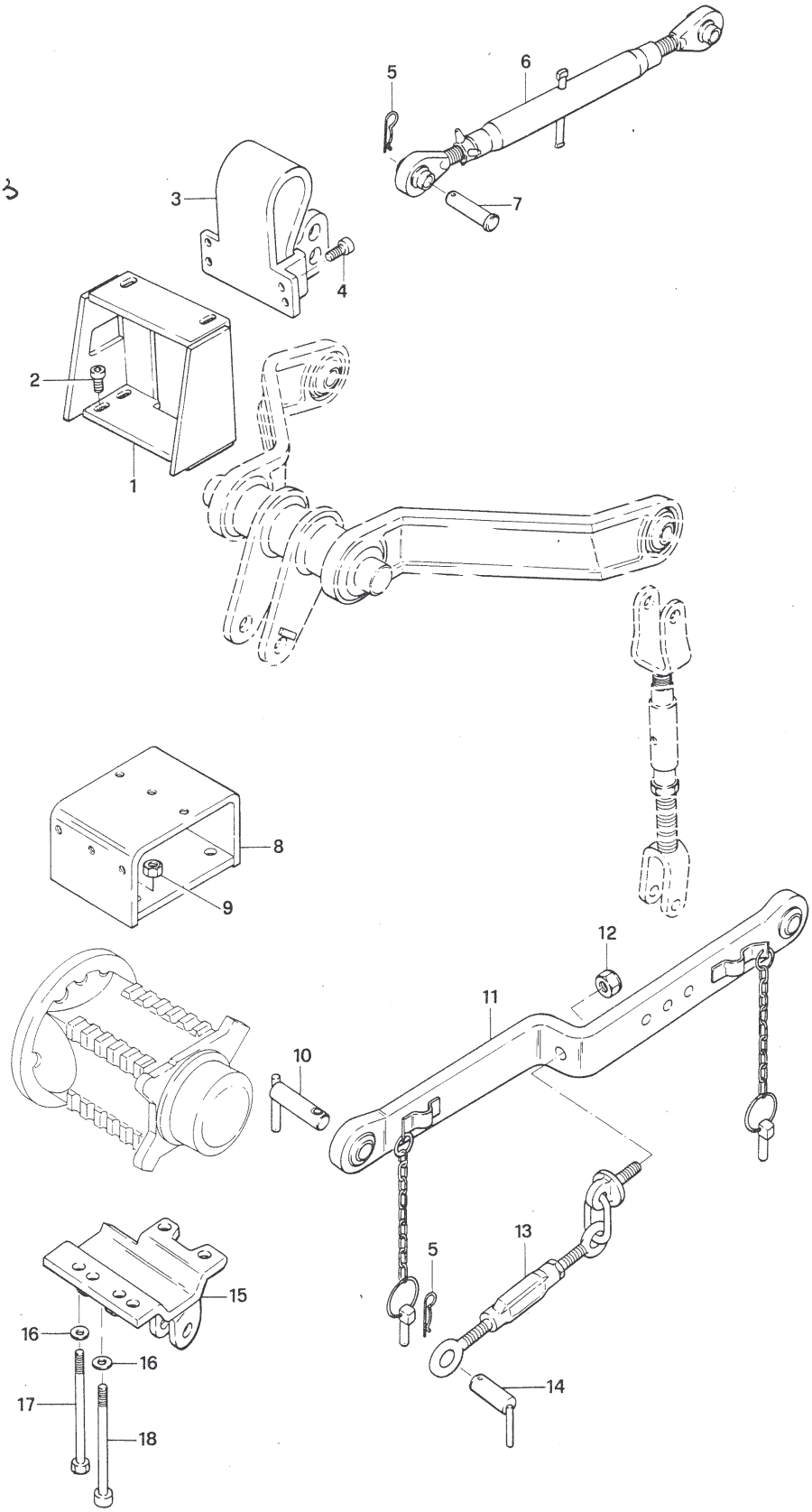

T.P.S. 4-108

Segnalazioni di validità

C2206B

Downloaded from www.Manualslib.com manuals search engine

	No. ORDIN.		No. ORDIN.
1	82.5444.000 ◐	17	82.5322.010
2	82.5454.000	18	82.5436.000 ◐
3	16.0017.901	19	82.5406.000 ◐
4	16.0017.900	20	11.0017.964 ◐
5	82.5322.040	—	16.0017.904 ●○◑
6	82.5324.030	21	81.7640.000
7	82.5436.000	22	82.5414.000
8	82.5400.000	23	86.1935.000
9	82.5452.000	24	84.3561.000
10	82.5405.000	25	84.3542.000
11	82.5437.000	26	81.4531.000
12	82.5401.000	27	81.4527.000
13	81.4517.000	28	11.0031.217
14	84.3522.000	29	86.1941.000
15	86.1874.000	30	82.5461.000
16	11.0017.913 ◐		
—	11.0019.900 ●○◑		

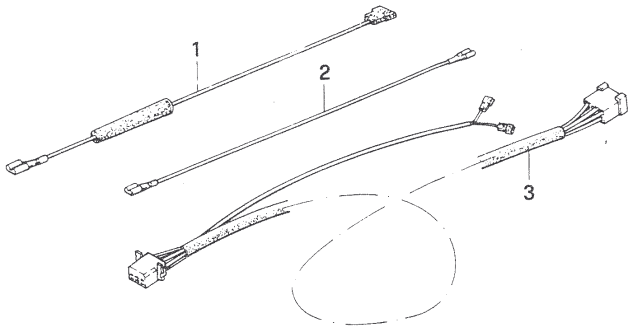

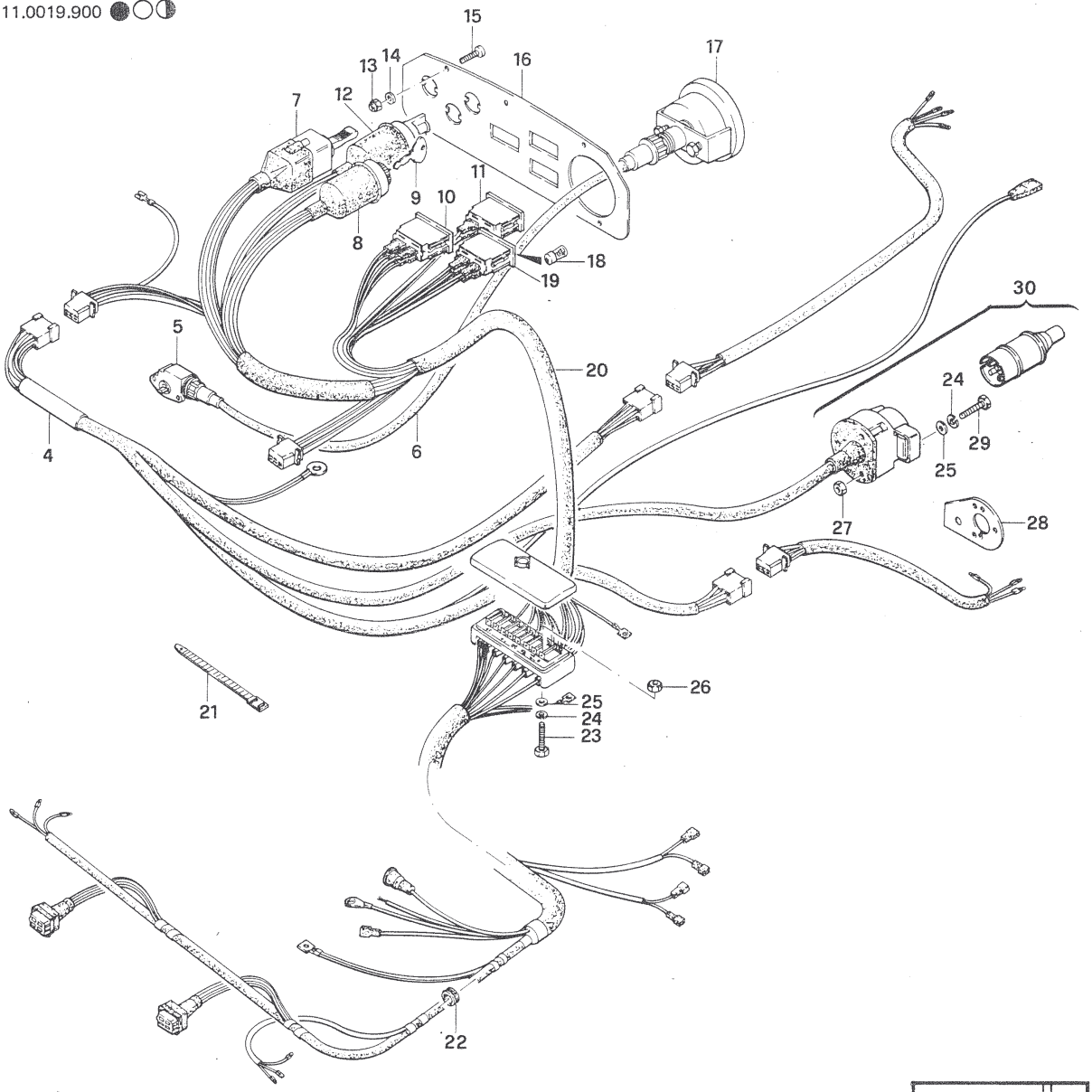

Nuova da inserire
New to be inserted
Nouvelle d'ajouter
Neu hinzuzufügen
Nueva de insertar

Nuova da inserire
New to be inserted
Nouvelle d'ajouter
Neu hinzuzufügen
Nueva de insertar

Downloaded from www.Manualslib.com manuals search engine

FERRARI
42045 LUZZARA (RE) TEL. (0522) 835524 (5 LINEE)

IMPIANTO ELETTRICO (2a PARTE)
ELECTRICAL SYSTEM (2nd PART)
EQUIPEMENT ELECTRIQUE (2ème PARTIE)
ELEKTRISCHE ANLAGE (2 TEIL)

75RS-85-86-86RS

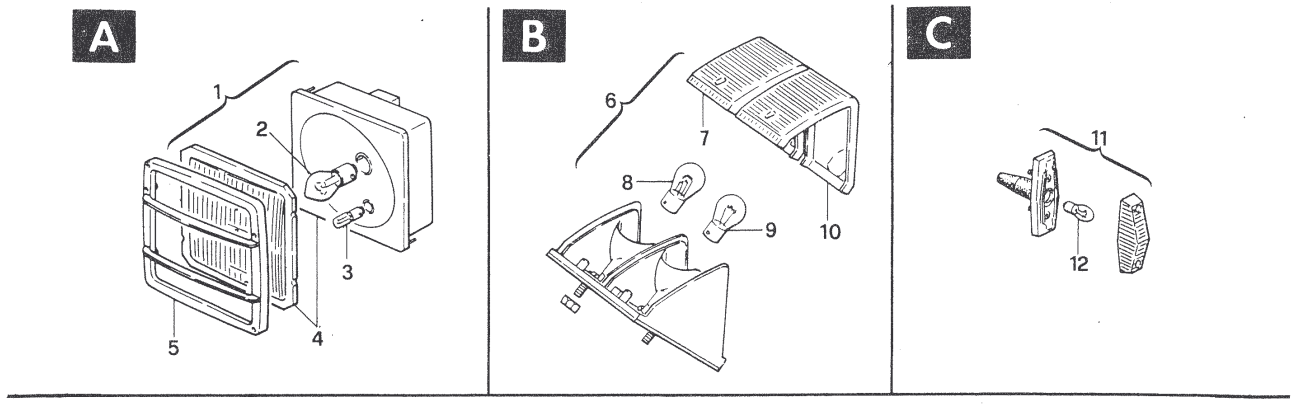

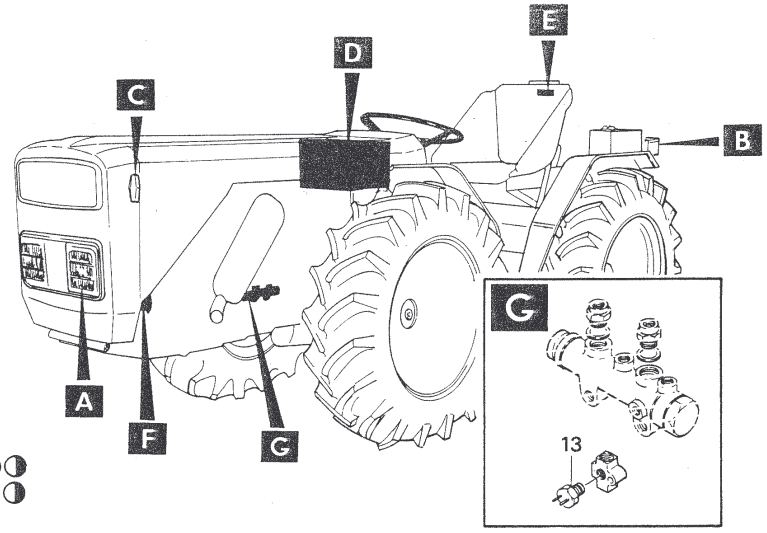

	No. ORDIN.
1	82.5404.000
2	82.5429.000
3	82.5426.000
4	82.5449.000
5	82.5432.000
6	82.5420.050
—	82.5420.000
7	82.5420.020
8	82.5420.010
9	82.5430.000
10	82.5420.030
11	82.5422.000
12	82.5426.000
13	82.5423.020
14	82.5462.000 ◐
—	82.5462.050 ● ○ ◑
15	82.5445.050 ● ○ ◑
16	82.5445.000 ◐

	No. ORDIN.
17	81.4574.000
18	84.3666.000
19	86.2555.000
20	82.5407.000 ● ○ ◑
21	82.5467.000 ● ○ ◑
22	16.0017.903 ● ○ ◑
23	82.5467.000 ● ○ ◑
—	82.5468.000 ◑
24	81.4545.000
25	84.3570.000
26	84.3605.010
27	86.2097.000
28	82.5138.000
29	82.5411.000
30	82.5412.000
31	86.3205.000
32	84.3798.000
33	82.5417.000
34	85.4001.020

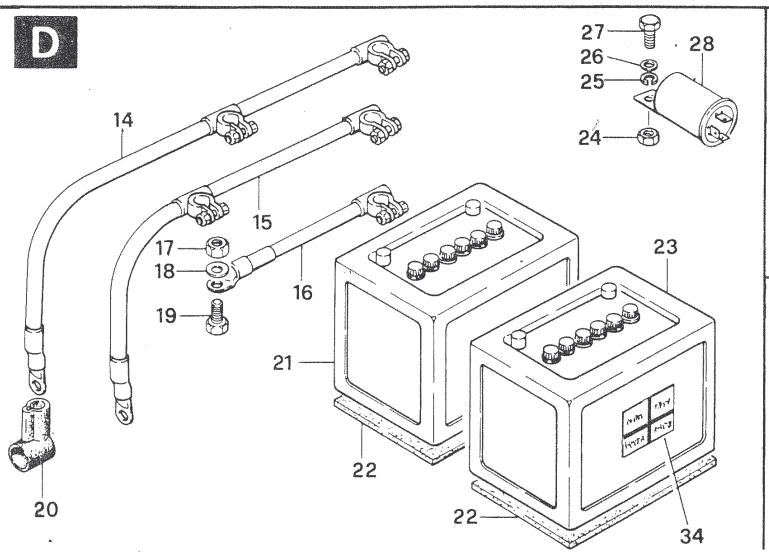

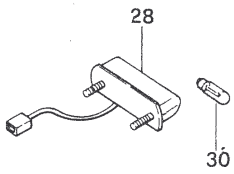

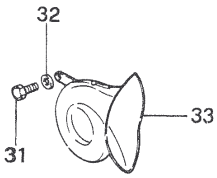

T.P.S. 4-108

C2605B

Segnalazioni di validità
Usage code
Signalisations de validité
Gultigkeitsvermerk
Indicaciones de validez

Nuova da inserire
New to be inserted
Nouvelle d'ajouter
Neu hinzuzufügen
Nueva de insertar

Downloaded from www.Manualslib.com manuals search engine

FERRARI
42045 LUZZARA (RE) TEL. (0522) 835524 (5 LINEE)

ACCESSORI
ACCESSORIES
ACCESSOIRES
ZUZEHOER
ACCESSORIOS

○ ● ◑
85–86–86RS

1a - 0278

	No. ORDIN.
1	11.0065.015
2	80.7028.000
3	09.0065.106
4	09.0065.107
5	80.7096.050
6	11.0065.026
7	82.6761.000
8	16.0065.011 ○ *
–	16.0066.011 ● *
–	16.0066.013 ◑ *
9	16.0065.010 ○
–	16.0066.010 ●
–	16.0066.012 ◑

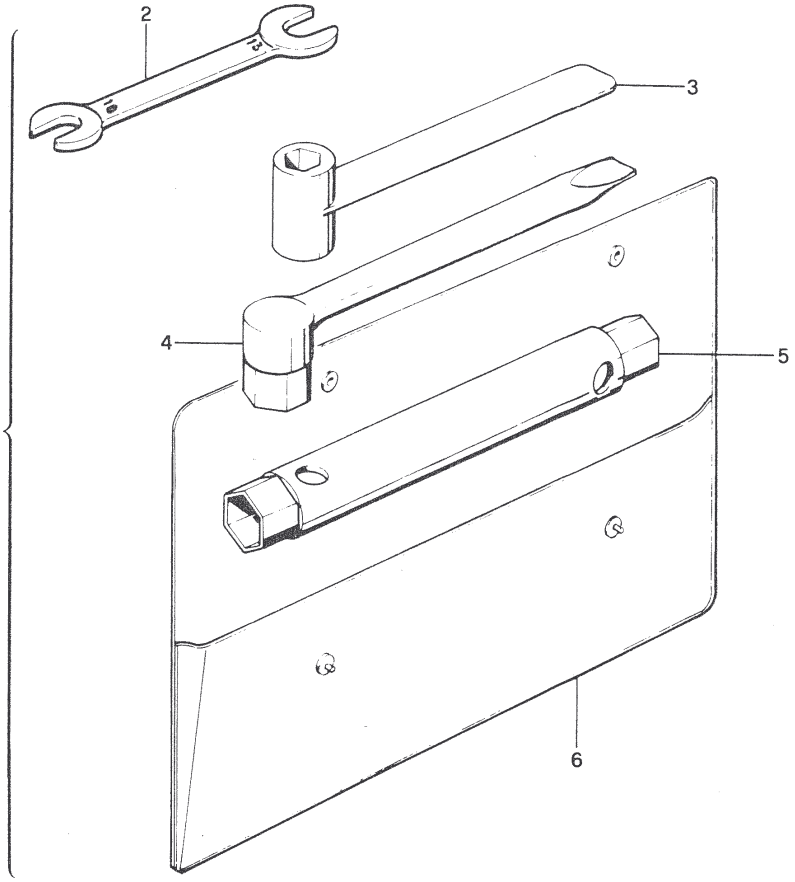

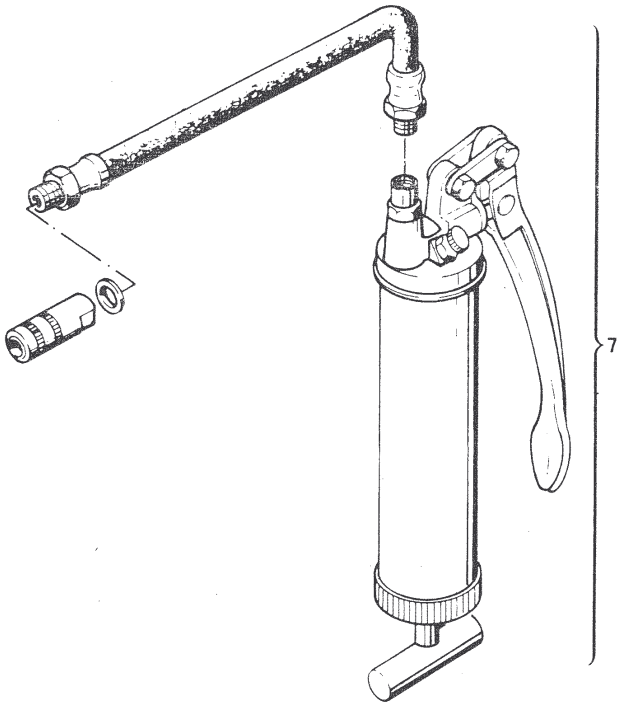

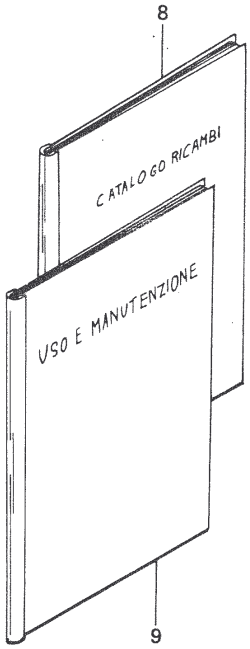

T.P.S. 4-289

C2807

Segnalazioni di validità
Usage code
Signalisations de validité
Gultigkeitsvermerk
Indicaciones de validez

* A.R.

Nuova da inserire
New to be inserted
Nouvelle d'ajouter
Neu hinzuzufügen
Nueva de insertar

Downloaded from www.Manualslib.com manuals search engine

	No. ORDIN.
1	86.4383.000 ✱
2	86.4351.000 ✱
3	84.4084.000 ✱
4	00.0010.011 ✱
5	84.8642.000 △
—	84.8664.000 ▲
6	84.8909.000 △
—	84.8920.000 ▲
7	84.9113.000 △
—	84.9117.000 ▲
8	86.4177.000 △
—	86.4357.000 ▲
9	11.0013.915 △
—	11.0013.013 ▲
10	11.0013.914 △
—	11.0013.912 ▲
11	84.3921.020 △
—	84.4030.010 ▲
12	81.4750.000 △
—	81.4787.000 ▲

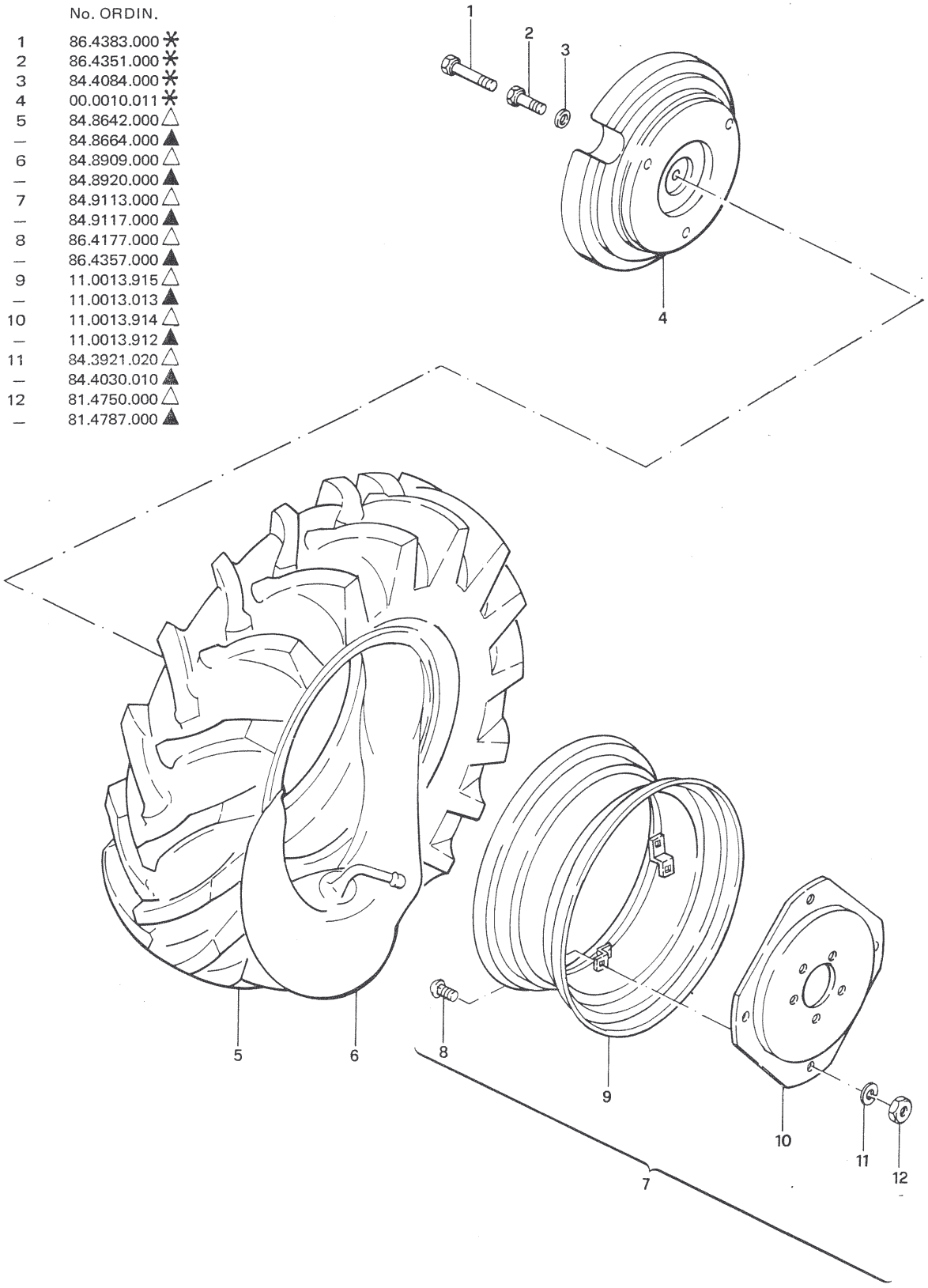

Segnalazioni di validità
Usage code
Signalisations de validité
Gültigkeitsvermerk
Indicaciones de validez

✱A.R. △ 7.50-18 ▲ 9.5-20

Nuova da inserire
New to be inserted
Nouvelle d'ajouter
Neu hinzuzufügen
Nueva de insertar

Downloaded from www.Manualslib.com manuals search engine

FERRARI
42045 LUZZARA (RE) TEL. (0522) 835524 (5 LINEE)

SNODO FRESA cm 125
ROTARY CULTIVATOR DRIVE SHAFT 125 cm
ARTICULATION FRAISE cm 125
FRAESE-GELENK cm 125
ARBOL DE TRANSMISION PARA FRESADORA cm 125

● ○ ◑
76-85-86

1a-0473	2a-0278

No. ORDIN. / *PART No.* / No. ORDIN. / *BESTELL No.* / No. REFERENCIA	
1	11.0045.202
2	11.0045.212
3	11.0045.208
4	11.0045.211
5	80.1232.000
6	01.0001.283
7	11.0045.210
8	82.6016.000
9	11.0045.209
10	11.0045.207
11	82.6062.000
12	11.0045.206
13	11.0045.205
14	85.1486.000
15	80.8036.000
16	11.0028.207 ●○
–	11.0042.229 ◑
17	11.0045.204 ●○
–	16.0042.201 ◑
18	86.4298.050
19	84.3993.000
20	84.3921.030
21	81.4767.000
22	80.8039.090

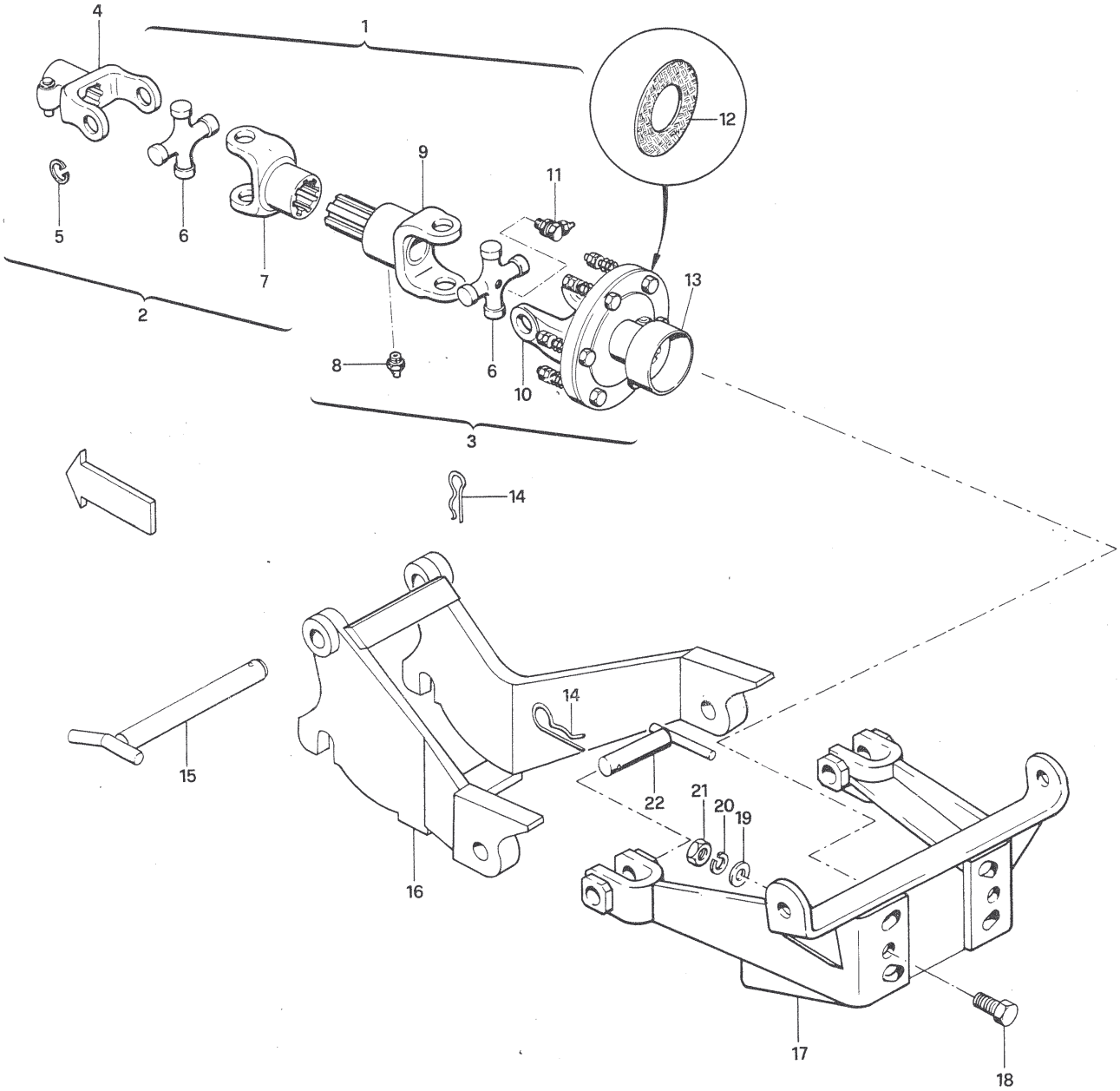

T.P.S. 4-289

Segnalazioni di validità
Usage code
Signalisations de validité
Gultigkeitsvermerk
Indicaciones de validez

~~F1103~~	1
F1103	2

Downloaded from www.Manualslib.com manuals search engine

No. ORDIN. / *PART No.* / No. ORDIN. / *BESTELL No.* / No. REFERENCIA	
1	82.1045.000
2	80.2198.050
3	80.3253.000
4	07.0040.010
5	80.6587.000
6	03.0040.211
7	80.2186.000
8	07.0040.011
9	07.0040.904
10	81.2942.000
11	85.0104.000 (0,2 mm)
—	85.0104.010 (0,3 mm)
—	85.0104.020 (0,5 mm)
12	07.0040.101
13	81.2859.000
14	07.0040.102
15	07.0040.227
16	81.4717.050
17	85.2597.000
18	84.3843.060
19	07.0040.903
20	11.0042.900
21	85.0089.000 (0,1 mm)
—	85.0089.010 (0,2 mm)
—	85.0089.020 (0,3 mm)
22	83.8576.000
23	80.1377.000
24	07.0040.214
25	03.0040.201
26	03.0040.234
27	07.0040.206
28	81.2838.000
29	07.0040.228
30	84.4482.000

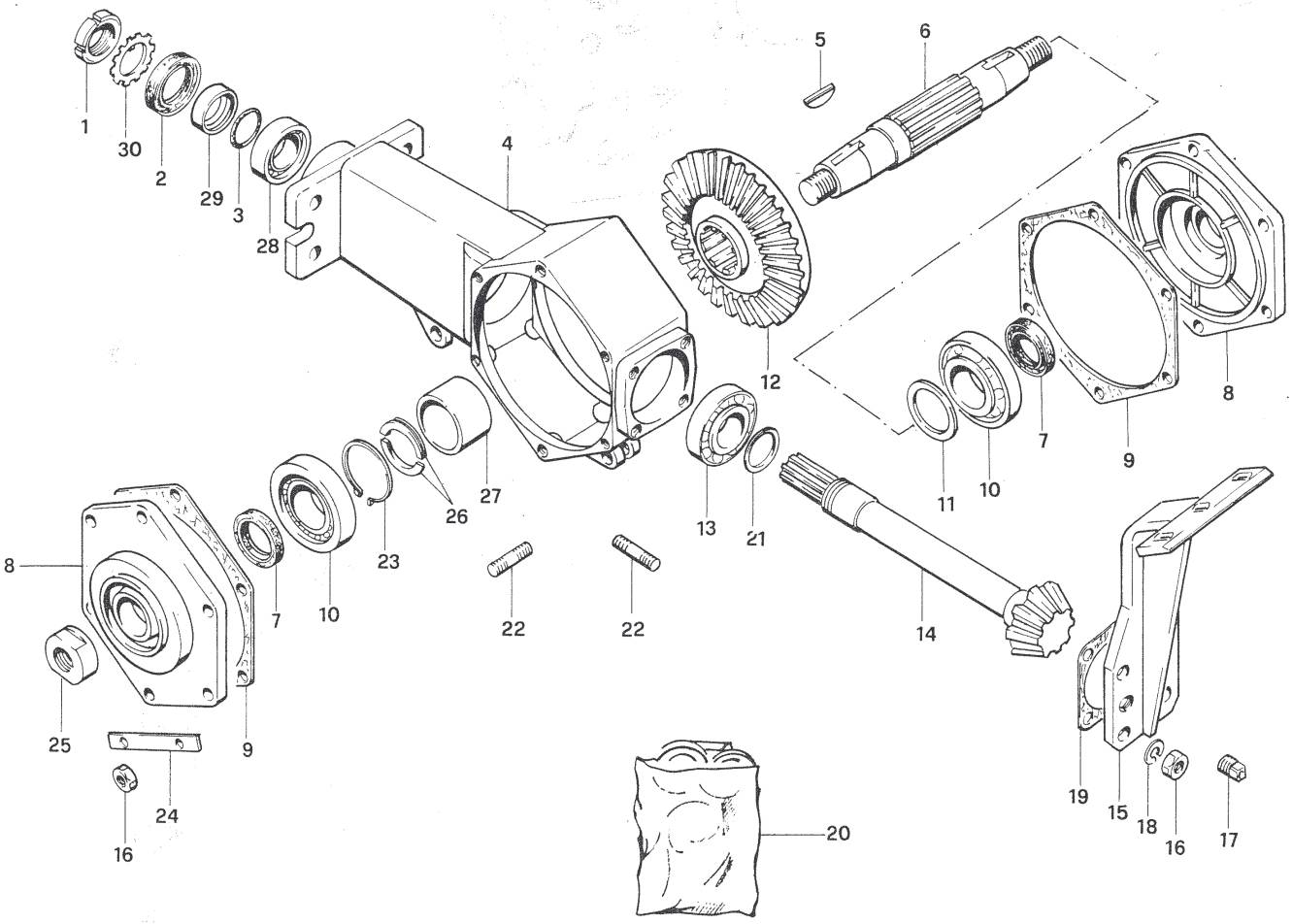

Downloaded from www.Manualslib.com manuals search engine

FERRARI
42045 LUZZARA (RE) TEL. (0522) 835524 (5 LINEE)

FRESA cm 125 (2a PARTE)
ROTARY CULTIVATOR 125 cm (2nd PART)
FRAISE cm 125 (2ème PARTIE)
FRAESE cm 125 (2 TEIL)
FRESA cm 125 (2a PARTE)

75RS-76-85-86

1a-0877	2a-0278

No. ORDIN. / *PART No.* / No. ORDIN. / *BESTELL No.* / No. REFERENCIA	
1	11.0043.256
2	11.0043.255
3	11.0043.257
4	81.4706.050
5	84.3843.060
6	84.3901.050
7	86.3951.000
8	84.4160.000
9	81.0617.000
10	11.0043.241
11	81.4721.000
12	11.0043.236
—	11.0043.237
13	86.3879.050
14	11.0043.243
15	11.0041.208
—	11.0043.245
16	11.0043.100
17	11.0041.207
—	11.0043.244
18	11.0046.200
19	11.0043.246
20	11.0043.247
21	86.3925.000
22	86.3997.010
23	11.0042.902
24	11.0046.000
25	85.4002.010
26	01.0001.485
27	16.0032.901
28	16.0033.902

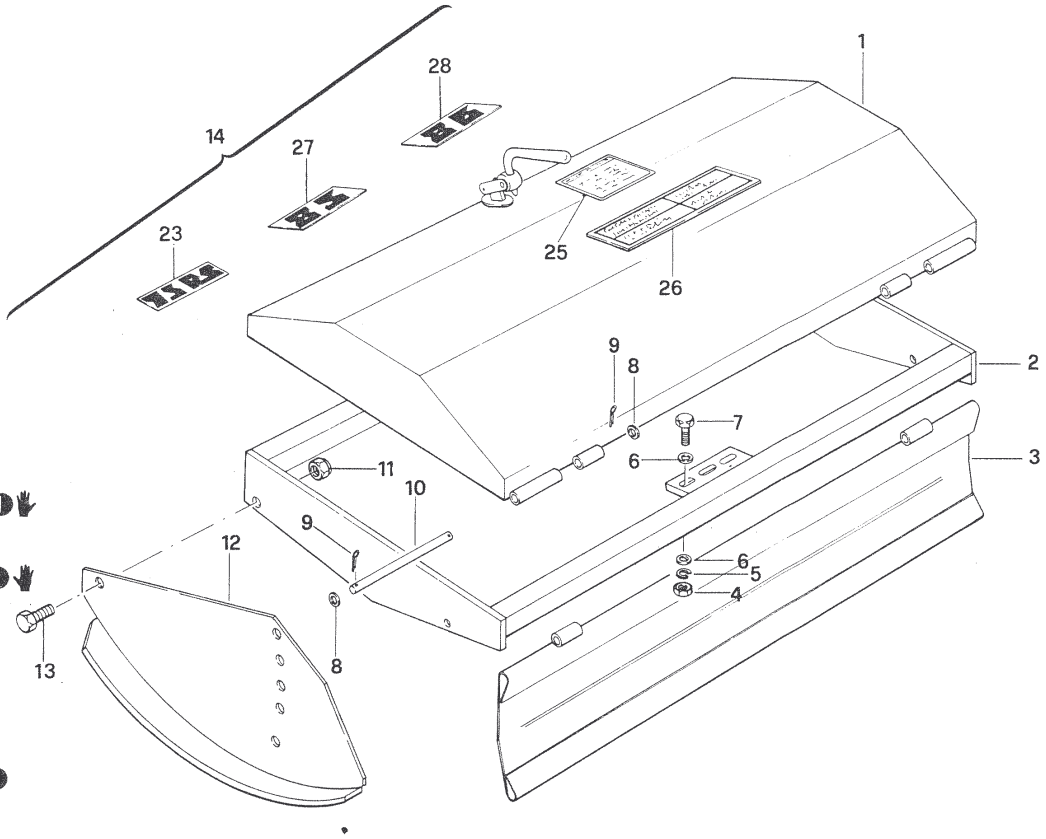

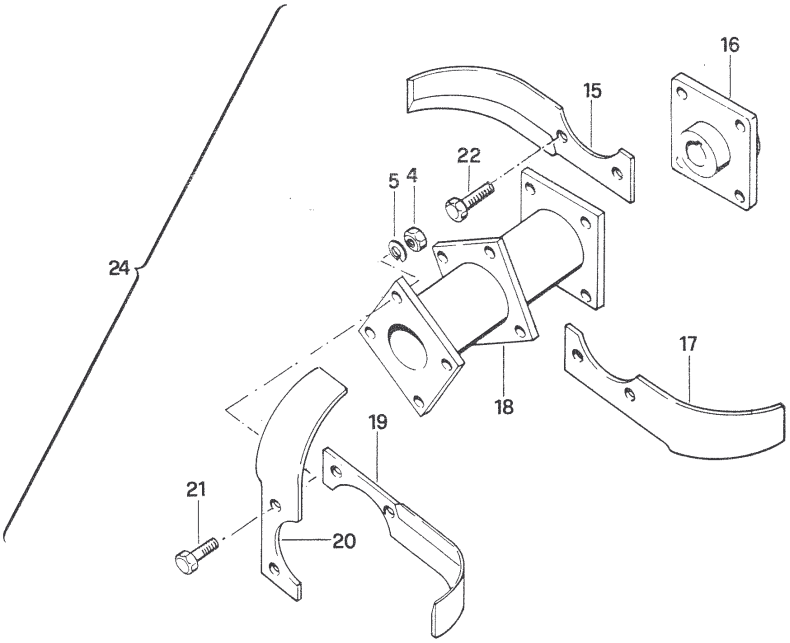

T.P.S. 4-289

Segnalazioni di validità
Usage code
Signalisations de validité
Gultigkeitsvermerk
Indicaciones de validez

~~F1301C~~	1
F1301C	2

Downloaded from www.Manualslib.com manuals search engine

HOW TO PLACE WATERWORKS PARTS

1 MACHINE TYPE

2 SYSTEM TYPE

UNITS AND PIPING

3 PUMP ACCORDING TO THE INSTALLED ENGINE (delivered as assembly)

4 HYDRAULIC DISTRIBUTOR (delivered as assembly)

5 POWER STEERING ACCORDING TO MODEL INSTALLED (delivered assembly)

6 CONNECTING LINES

PARTS OF A UNIT

7 REFER TO THE SUITABLE FIGURE

8 VALIDITY NOTES (shall be construed as stated in the spare Parts Catalogue)

FERRARI

42045 LUZZARA (RE) TEL. (0522) 835524 (5 LINEE)

IMPIANTO IDRAULICO - IDROSTERZO E DISTRIBUTORE A POSIZIONE E SFORZO CONTROLLATO

HYDRAULIC EQUIPMENT - HYDRAULIC STEERING AND LIFTER PROVIDED WITH AUTOMATIC DEPTH CONTROL 2

EQUIPEMENT HYDRAULIQUE - DIRECTION HYDRAULIQUE ET DISTRIBUTEUR AVEC REGLAGE AUTOMATIQUE DE LA PROFONDEUR AINSI QUE DE L'EFFORT DE TRAVAIL

ANLAGE HYDRAULISCH - LENKUNG HYDRAULISCH UND VERTEILER MIT AUTOMATISCHER EINSTELLUNG DER ARBEITSTIEFE UND KRAFT

75 1

1a-0777

	COSTRUTTORE *MANUFACTURER* CONSTRUCTEUR *KONSTRUKTEUR*	TIPO *TYPE* TYPE *TYP*	No. ORDINAZIONE *PART No.* No. DE COMMANDE *BESTELLNUMMER*	FIGURA E DETTAGLIO *FIGURE & INDEX No.* FIGURE & DETAIL *BILD UND EINZELHEIT*	MOTORE *ENGINE* MOTEUR *MOTOR*	
A	HIDROIRMA	AM 2/20-D	83.6500.000	(H00501) (Z3)	LDA672 RD92/2	3
	HIDROIRMA	AM 2/20-S	83.6507.000	(H00501) (Z3)	LDA904 LDA914	
B	ERPOZ		82.5984.000	(H00509) (R1)		4
	SAFER		82.5989.010	(H00511) (R3)		
C	DANFOSS	OSPA 80.800	86.5466.000	(H00506) (S1)		5
	TRW	HGA 07	86.5468.000	(H00507) (S2)		
	ZF	SERVOSTAT 8451.955.121	86.5469.000	(H00508) (S3)		

	No. ORDIN.
11	11.0029.979 ▲△✱
—	11.0029.985 ▲✱
2	11.0029.991 ▲
—	11.0029.994 ▲△
3	11.0029.808 ✱
4	11.0029.800
5	11.0029.998 ✱
6	11.0029.997
7	11.0029.935
8	11.0029.934
9	11.0029.945

6

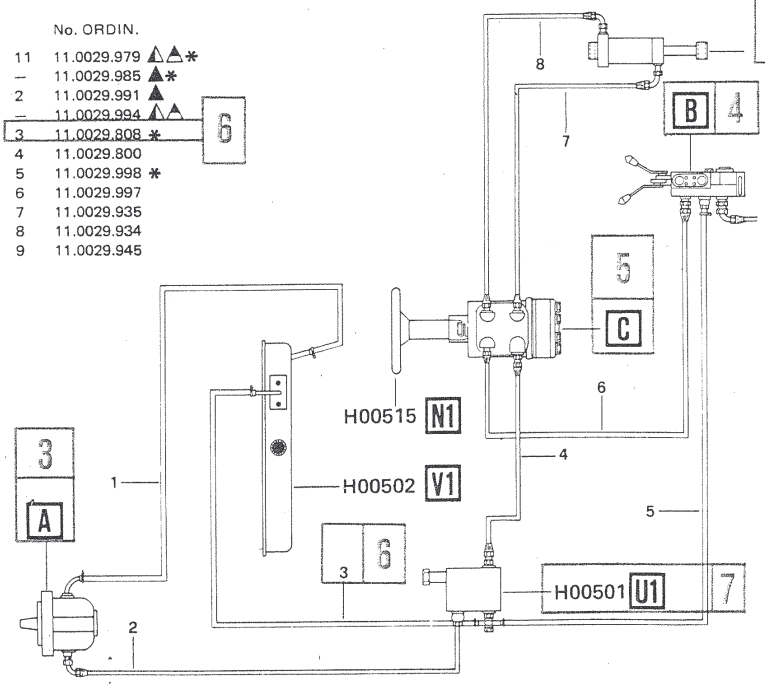

U1 VALVOLA REGOLATRICE DI PRESSIONE 7

MAX. PRESSURE RELIEVE VALVE

SOUPAPE DE REGLAGE

ZUGREGISTER

	No. ORDIN.
1	82.5983.000
2	86.2359.000
3	84.3571.000
4	11.0029.226
5	81.4543.000
6	84.3571.000
7	83.5035.000
8	82.4113.000
9	84.3110.000
10	82.4113.000
11	84.3110.000
12	11.0029.257
13	82.4113.000
14	81.7514.000

7

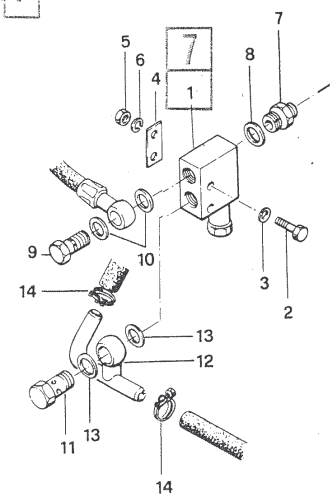

T.P.S. 4-122

Segnalazioni di validità / Usage code / Signalisations de validité / Gültigkeitsvermerk

▲ LDA672
△ LDA904-914
△ RD92/2

✱ INDICARE LUNGHEZZA
✱ *STATE THE LENGHT*
✱ INDIQUER LA LONGUEUR
✱ *ANZEIGEN DIE LANGE*

8

7 H00501

Downloaded from www.Manualslib.com manuals search engine

	No. ORDIN.
1	11.0027.921✻△
–	11.0029.910✻◭
–	11.0029.985✻▲
–	11.0027.921✻◭
2	11.0027.926△
–	11.0029.906◭
–	16.0029.909▲
–	11.0027.926◭
3	11.0029.985✻
4	11.0027.924
5	16.0029.901✻
6	11.0027.923
7	11.0029.935
8	11.0029.934
9	16.0029.905

	COSTRUTTORE *MANUFACTURER* CONSTRUCTEUR *KONSTRUKTEUR*	TIPO *TYPE* TYPE *TYP*	No. ORDINAZIONE *PART No.* No. DE COMMANDE *BESTELLNUMMER*	FIGURA E DETTAGLIO *FIGURE & INDEX No.* FIGURE & DETAIL *BILD UND EINZELHEIT*	MOTORE *ENGINE* MOTEUR *MOTOR*
A	HIDROIRMA	AM 2/24-DS	83.6509.000	(H00525) (Z1)	LDA 673 LDA 832
B	ERPOZ		82.5991.000	(H00531) (R1)	
C	TRW	HGA 07	86.5468.000	(H00530) (S1)	

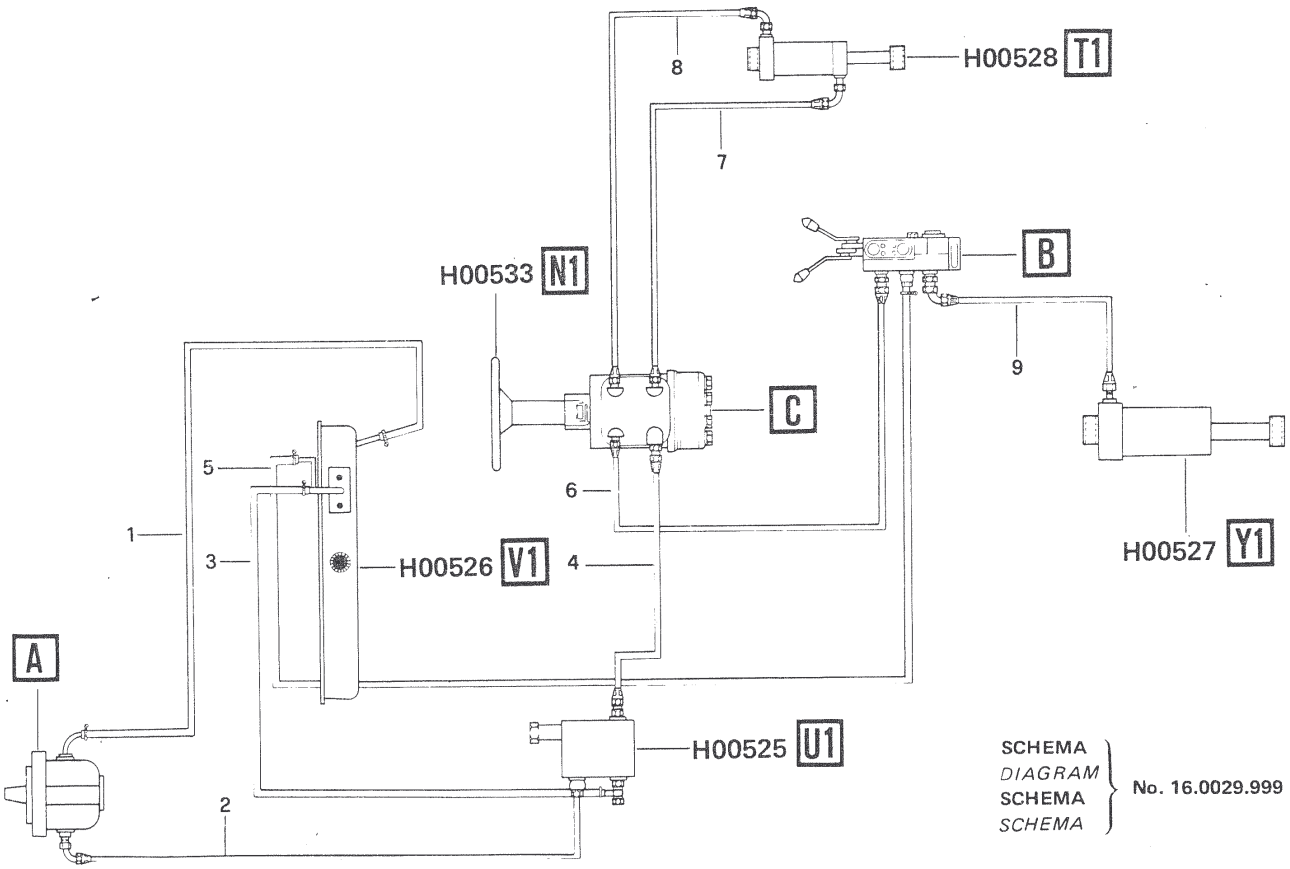

SCHEMA
DIAGRAM
SCHEMA
SCHEMA
No. 16.0029.999

T.P.S. 4-330

Segnalazioni di validità
Usage code
Signalisations de validité
Gultigkeitsvermerk

△ LDA673
▲ LDA832

DOPPIA FRIZIONE ◭ 673 ◭ 832
DOUBLE DISC CLUTCH ◭ 673 ◭ 832
DOUBLE EMBRAYAGE ◭ 673 ◭ 832
DOPPLE KUPPLUNG ◭ 673 ◭ 832

✻ INDICARE LUNGHEZZA
✻ *STATE THE LENGHT*
✻ INDIQUER LA LONGUEUR
✻ *ANZEIGEN DIE LANGE*

H00007

Downloaded from www.Manualslib.com manuals search engine

FERRARI
42045 LUZZARA (RE) TEL. (0522) 835524 (5 LINEE)

POMPA E VALVOLA REGOLATRICE DI PRESSIONE
MAX. PRESSURE RELIEVE VALVE
POMPE ET SOUPAPE DE REGLAGE
PUMPE UND ZUGREGISTER

85-86-86 RS

1a-1077

Z1 POMPA CON ALBERO CONICO
CONICAL SHAFT PUMP
POMPE A ARBRE CONIQUE
KONISCHWELLEPUMPE

	No. ORDIN.
1	82.5810.000
2	82.2193.000
3	86.2462.010
4	82.4022.000
5	80.3185.000
6	86.2270.000
7	11.0027.217
8	86.2108.000
9	80.3185.000
10	81.7514.000

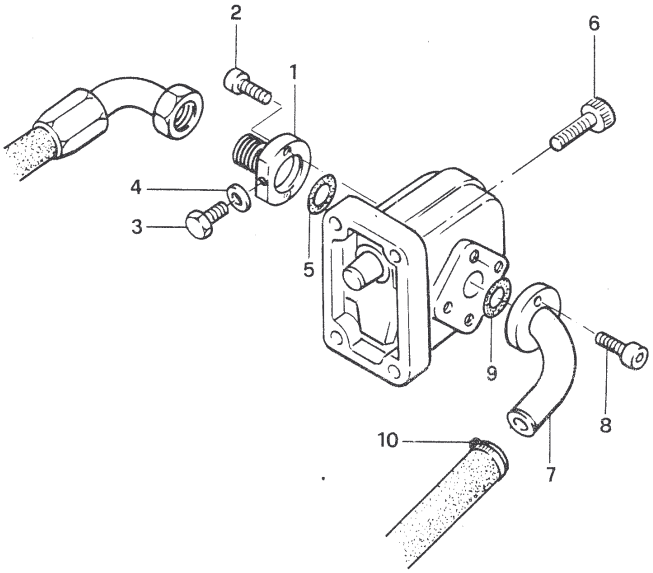

U1 VALVOLA REGOLATRICE DI PRESSIONE
MAX. PRESSURE RELIEVE VALVE
SOUPAPE DE REGLAGE
ZUGREGISTER

	No. ORDIN.
1	82.5983.000
2	86.2346.000
3	84.3571.000
4	83.5034.000
5	82.4113.000
6	82.5035.000
7	82.4113.000

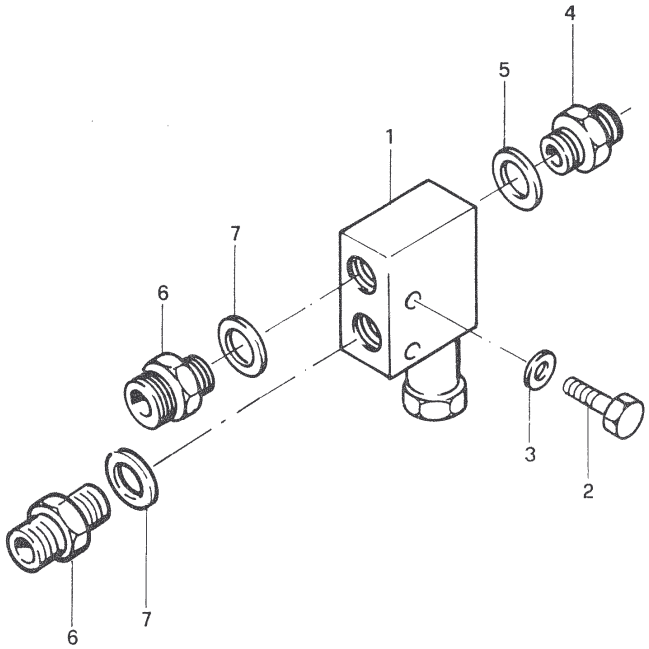

Segnalazioni di validità
Usage code
Signalisations de validité
Gultigkeitsvermerk

H00525

Downloaded from www.Manualslib.com manuals search engine

FERRARI
42045 LUZZARA (RE) TEL. (0522) 835524 (5 LINEE)

SERBATOIO OLIO IDRAULICO
OIL TANK
RESERVOIR D'HUILE
HYDRAULIKOLBEHALTER

85-86-86 RS

1a-1077

V1

	No. ORDIN.
1	16.0029.206
2	81.7514.000
3	86.2554.000
4	84.3666.000
5	11.0029.999
6	85.2679.000
7	81.4781.000
8	82.5960.020
9	16.0029.200
10	11.0029.907
11	86.2554.000
12	84.3666.000
13	81.4589.010
14	85.2597.000

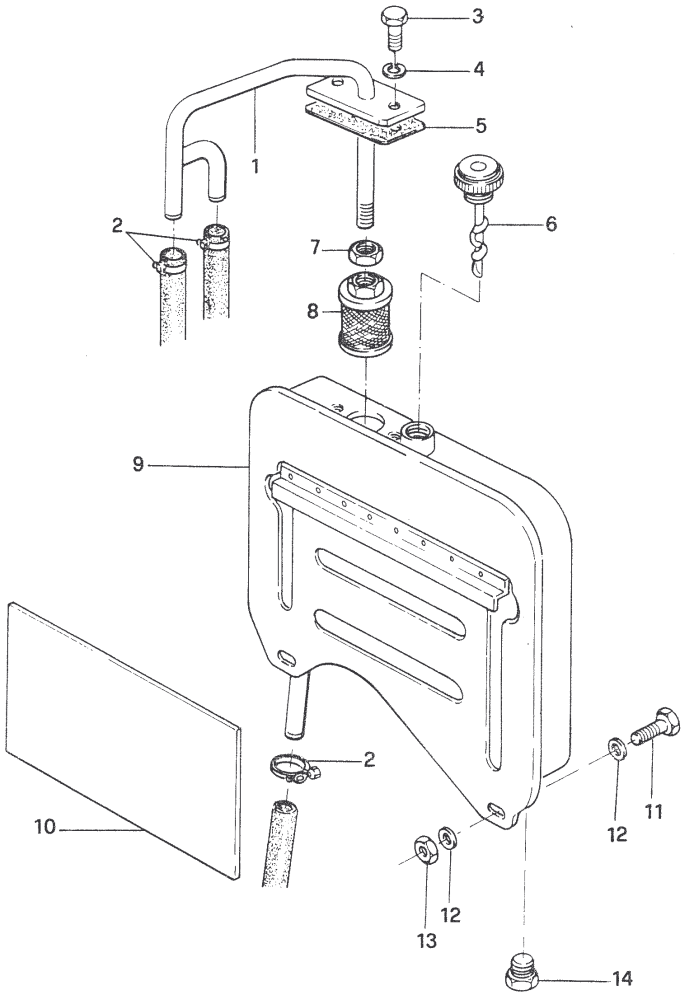

T.P.S. 4-330

Segnalazioni di validità
Usage code
Signalisations de validité
Gultigkeitsvermerk

H00526

Downloaded from www.Manualslib.com manuals search engine

FERRARI
42045 LUZZARA (RE) TEL. (0522) 835524 (5 LINEE)

MARTINETTO DEL SOLLEVATORE
POWER - LIFT JACK
VERIN DE LEVAGE
HEBEZYLINDER

85-86-86 RS

1a-1077

Y1

	No. ORDIN.
1	80.9327.000
2	83.5812.000
3	81.0561.000
4	84.4230.000
5	80.9322.000
6	80.9325.000
7	81.4793.000
8	84.4040.000
9	80.9326.000
10	80.2239.040
11	80.9303.000
12	80.3186.000
13	80.9324.000
14	80.2176.000
15	80.9328.000
16	80.4250.000
17	82.6038.000
18	11.0029.265 1100
19.	84.4273.000

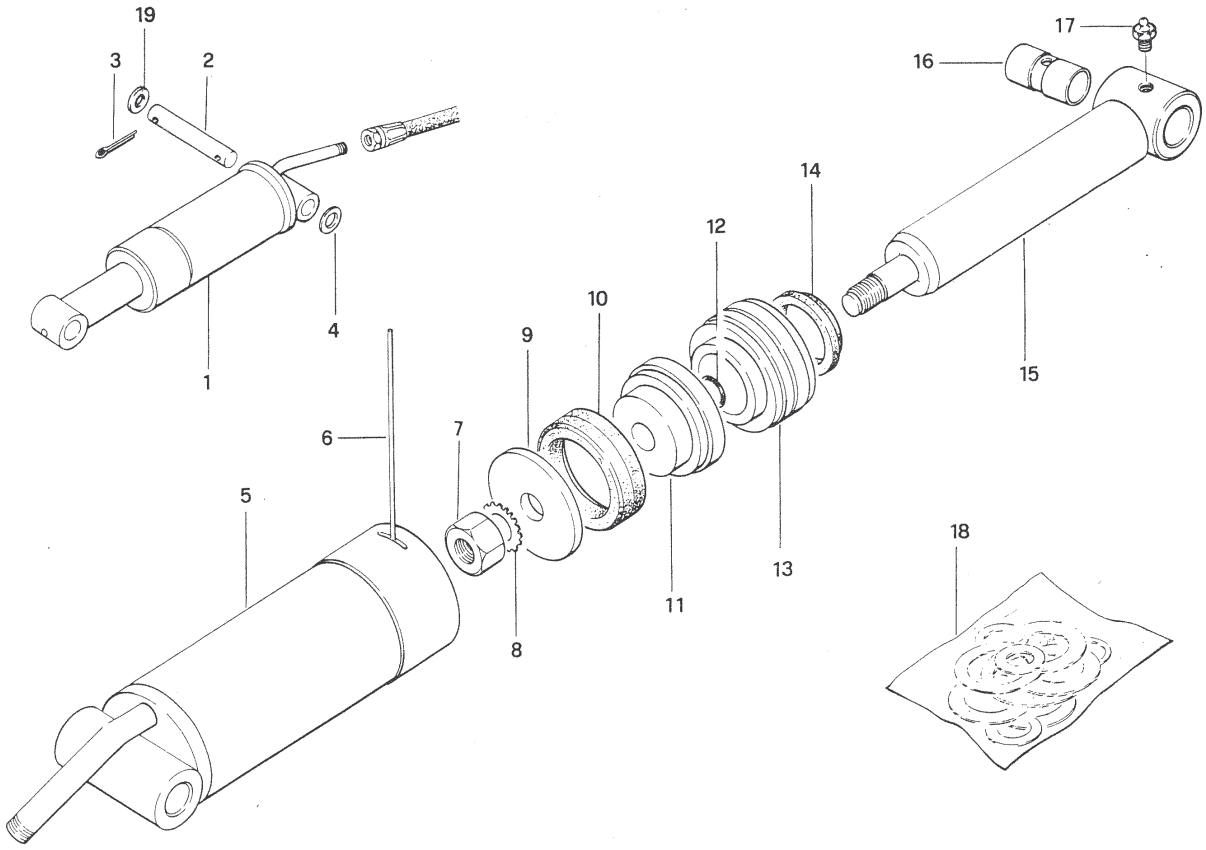

T.P.S. 4-330

Segnalazioni di validità
Usage code
Signalisations de validité
Gultigkeitsvermerk

H00527

Downloaded from www.Manualslib.com manuals search engine

MARTINETTO DELLO STERZO
STEERING JACK
VERIN DIRECTION
LENKZYLINDER

T1

	No. ORDIN.		No. ORDIN.
1	16.0027.200	17	84.3992.050
2	86.3735.000	18	81.4765.050
3	84.3843.050	19	80.9271.000
4	86.3428.000	20	80.9274.000
5	84.3755.050	21	80.9318.010
6	80.9318.000	22	80.2089.010
7	83.5775.050	23	80.3282.000
8	81.0625.000	24	80.2089.025
9	83.5006.000	25	80.3066.000
10	84.3907.000	26	80.9312.000
11	82.6016.000	27	84.4005.000
12	81.1950.000	28	81.4798.000
13	80.1160.000	29	80.3335.000
14	85.2756.000	30	80.9275.000
15	11.0030.226	31	11.0026.905
16	81.1955.000		

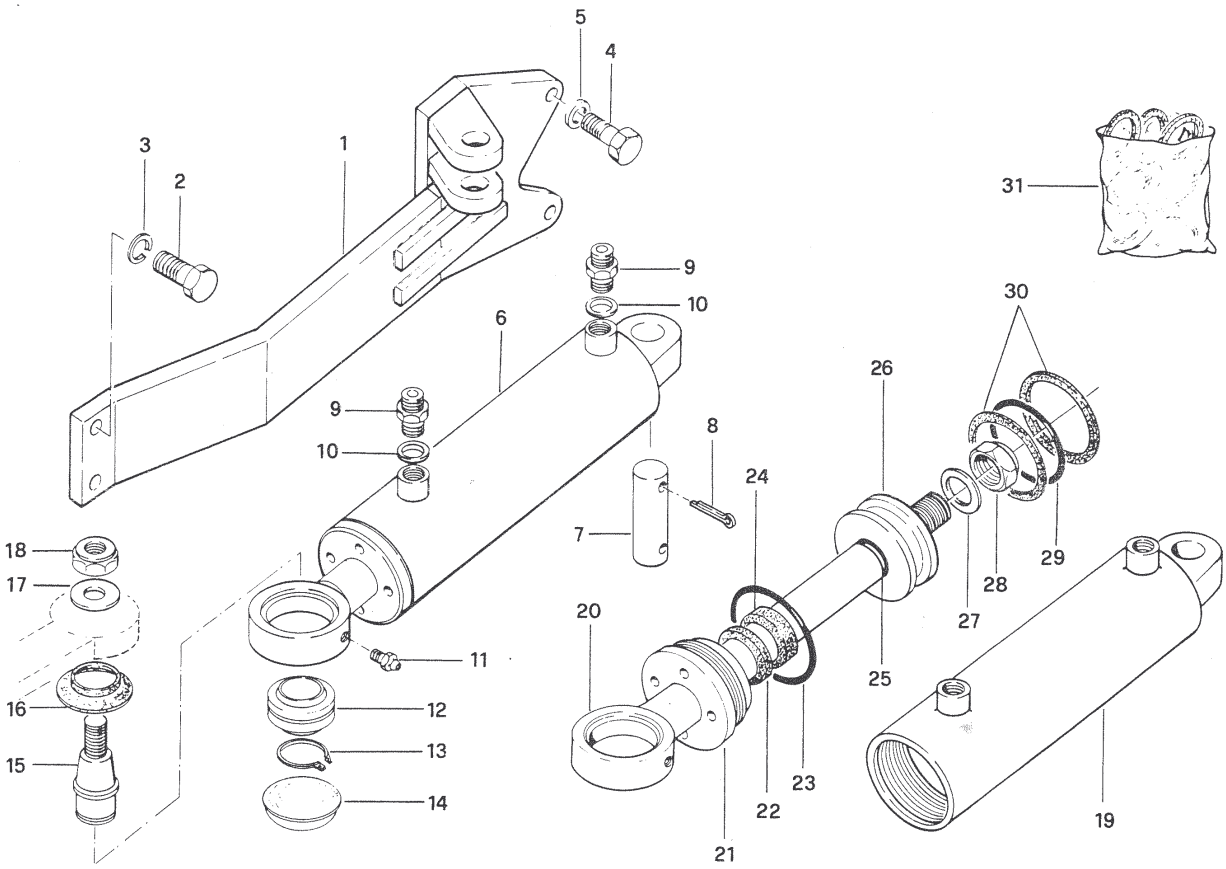

Segnalazioni di validità
Usage code
Signalisations de validité
Gultigkeitsvermerk

Downloaded from www.Manualslib.com manuals search engine

Alb. STERZO DANFOSS
497064102

S1

	No. ORDIN.
1	11.0026.011
2	86.2440.040
3	11.0026.221
4	85.1407.090
5	80.6460.000
6	80.4323.050
7	16.0029.201
8	86.3868.000
9	86.5468.000
10	80.3183.000
11	82.5710.000
12	11.0026.906
13	83.5040.000
14	82.4141.000
15	83.5037.000
16	82.4141.000
17	83.5037.000
18	82.4141.000
19	83.5040.000
20	82.4141.000
21	86.2919.000

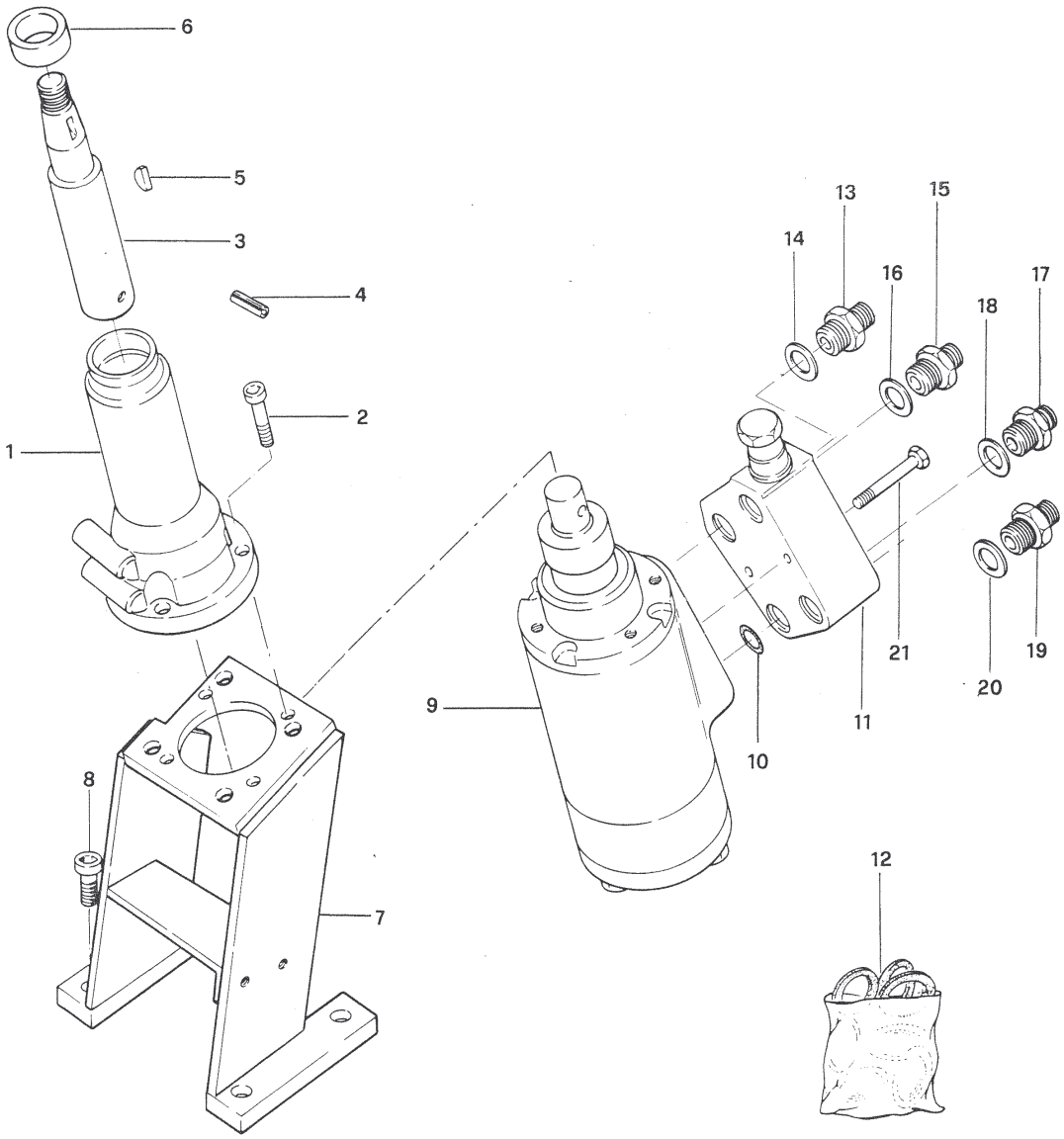

Downloaded from www.Manualslib.com manuals search engine

FERRARI
42045 LUZZARA (RE) TEL. (0522) 835524 (5 LINEE)

DISTRIBUTORE A POSIZIONE E SFORZO CONTROLLATO ERPOZ (per dettagli ved. fig. H00532A e B)
DISTRIBUTOR PROVIDED WITH AUTOMATIC DEPTH CONTROL (det. ved. fig. H00532A and B)
DISTRIBUTEUR AVEC REGLAGE AUTOMATIQUE DE LA FROFONDEUR AINSI QUE DE L'EFFORT DE TRAVAIL (det. fig. H00532A et B)
VERTEILER MIT AUTOMATISCHER EINSTELLUNG DER ARBEITSTIEFE UND KRAFT (enzelheiten bild H00532A und B)

85-86-86 RS

1a-1077

R2

SF CON. MITA x 86-86RS

825855150

MOLLA - 825860038 -

	No. ORDIN.
1	16.0031.255
2	86.3700.000
3	82.5991.000
4	86.3276.000
5	84.3755.000
6	84.3807.000
7	83.5006.000
8	84.3907.000
9	84.3109.020
10	84.2520.000
11	84.4110.000
12	83.5006.000
13	84.3907.000
14	11.0027.210 *
15	82.4113.000 *
16	82.5980.000 *
17	11.0029.254 *
18	86.3700.000

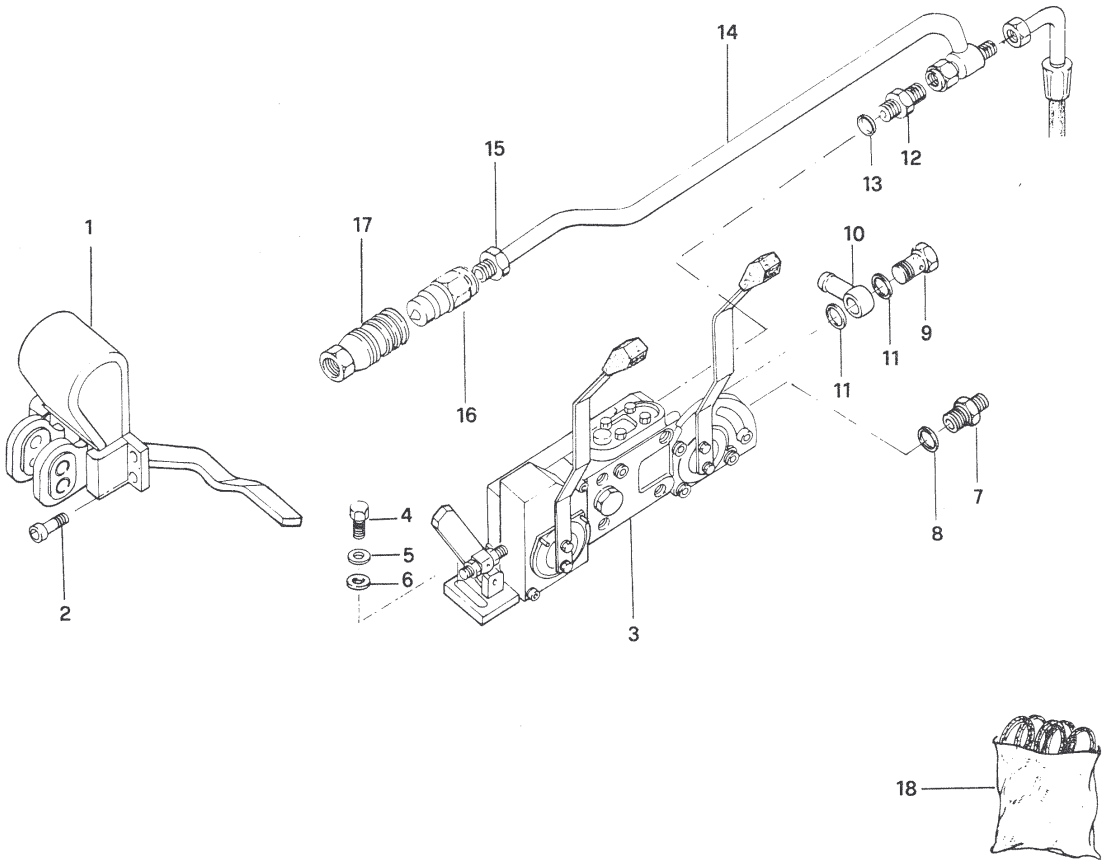

T.P.S. 4-330

Segnalazioni di validità
Usage code
Signalisations de validité
Gultigkeitsvermerk

*A RICHIESTA
*ON REQUEST

*SUR DEMANDE
**NUR ANFRAGE*

H00531

Downloaded from www.Manualslib.com manuals search engine

FERRARI
42045 LUZZARA (RE) TEL. (0522) 835524 (5 LINEE)

DISTRIBUTORE A POSIZIONE E SFORZO CONTROLLATO
(dettagli 1a parte)
DISTRIBUTOR PROVIDED WITH AUTOMATIC DEPTH CONTROL
(det. 1st part)
DISTRIBUTEUR AVEC REGLAGE AUTOMATIQUE DE LA PROFONDEUR AINSI QUE DE L'EFFORT DE TRAVAIL
(det. 1ère partie))
VERTEILER MIT AUTOMATISCHER EINSTELLUNG DER ARBEITSTIEFE UND KRAFT (enzelheiten 1 teil)

85-86-86 RS

1a-1077

R1

	No. ORDIN.		No. ORDIN.		No. ORDIN.		No. ORDIN.
1	80.1006.000	14	82.5991.001	27	82.5984.002	40	82.5984.046
2	85.1165.000	15	80.1072.000	28	82.5984.003	41	82.5984.047
3	82.5991.008	16	86.2621.000	29	81.0503.000	42	82.5984.054
4	86.2314.000	17	84.3684.000	30	82.5984.044	43	85.1213.000
5	81.4570.010	18	82.5991.005	31	86.2963.000	44	82.5984.050
6	82.5984.042	19	82.5991.004	32	84.3643.050	45	82.5984.051
7	82.5984.038	20	85.1139.000	33	82.5984.040	46	85.1179.050
8	82.5984.039	21	82.5991.003	34	85.1165.000	47	82.5984.052
9	86.1972.000	22	82.5991.002	35	82.5991.009	48	82.5984.053
10	82.5984.040	23	82.5991.006	36	86.2097.000	49	82.5984.048
11	82.5984.041	24	81.4570.010	37	84.3575.000	50	84.3684.000
12	86.1997.000	25	82.5984.009	38	82.5984.055	51	86.2563.000
13	84.3575.000	26	82.5991.007	39	82.5984.045		

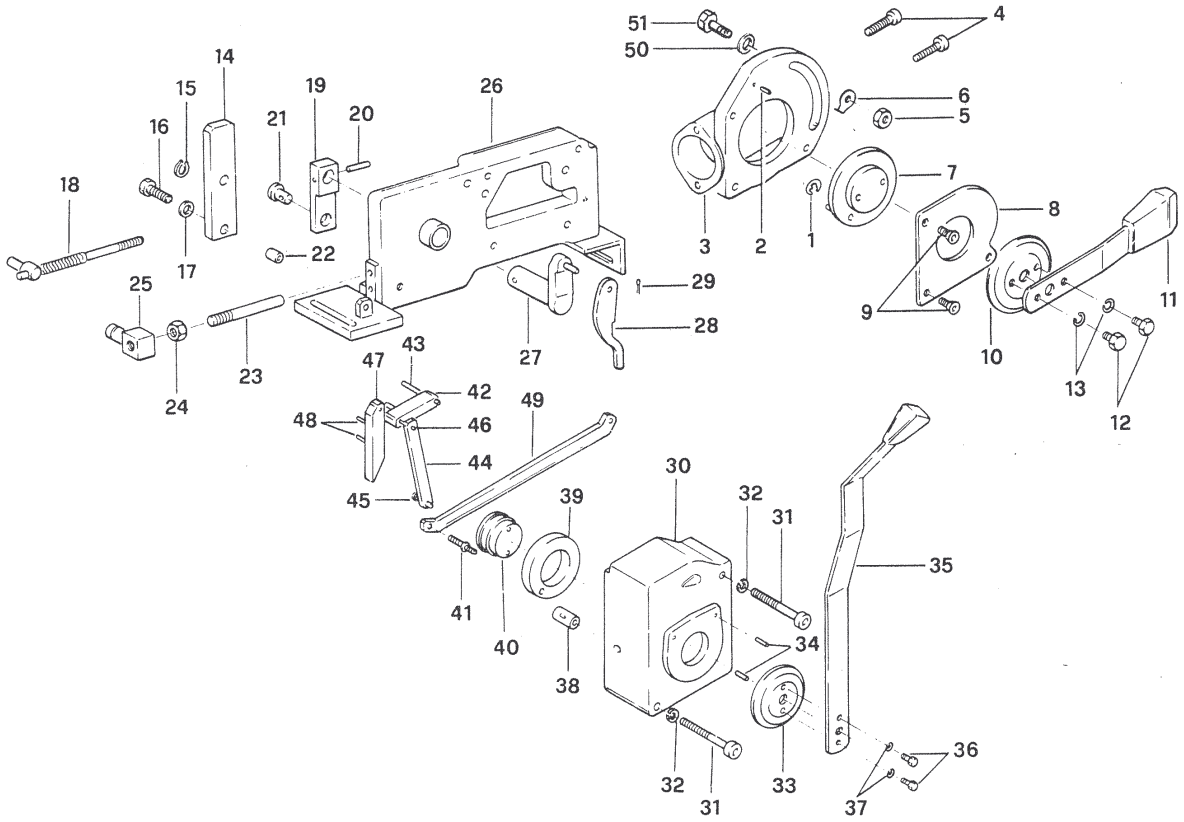

T.P.S. 4-330

Segnalazioni di validità
Usage code
Signalisations de validité
Gultigkeitsvermerk

H00532 | A

Downloaded from www.Manualslib.com manuals search engine

DISTRIBUTORE A POSIZIONE E SFORZO CONTROLLATO
(dettagli 2a parte)

DISTRIBUTOR PROVIDED WITH AUTOMATIC DEPTH CONTROL
(det. 2nd part)

DISTRIBUTEUR AVEC REGLAGE AUTOMATIQUE DE LA PROFONDEUR AINSI QUE DE L'EFFORT DE TRAVAIL
(det. (2ème partie)

VERTEILER MIT AUTOMATISCHER EINSTELLUNG DER ARBEITSTIEFE UND KRAFT (enzelheiten 2 teil)

85-86-86 RS

1a-1077

R1

	No. ORDIN.		No. ORDIN.
1	86.2259.000	23	82.5984.032
2	84.3571.000	24	86.2910.000
3	82.5984.030	25	86.2910.000
4	82.5984.024	26	82.5984.014
5	80.3195.000	27	82.5984.060
6	80.3206.000	28	86.2910.000
7	80.3195.000	29	80.3204.000
8	82.5984.023	30	82.5984.033
9	82.5984.022	31	82.5984.034
10	82.5984.029	32	82.5984.031
11	82.5984.026	33	82.5984.032
12	82.5984.028	34	82.5984.012 ▲
13	82.5984.021	35	82.5984.011 ▲
14	82.5984.027	36	82.5984.019
15	82.5984.020	37	82.5984.018
16	82.5984.025	38	85.1022.000
17	82.5984.020	39	80.3175.000
18	80.3185.000	40	82.5984.015
19	82.5984.035	41	82.5984.016
20	80.1174.000		
21	82.5984.017		
22	82.5984.013		

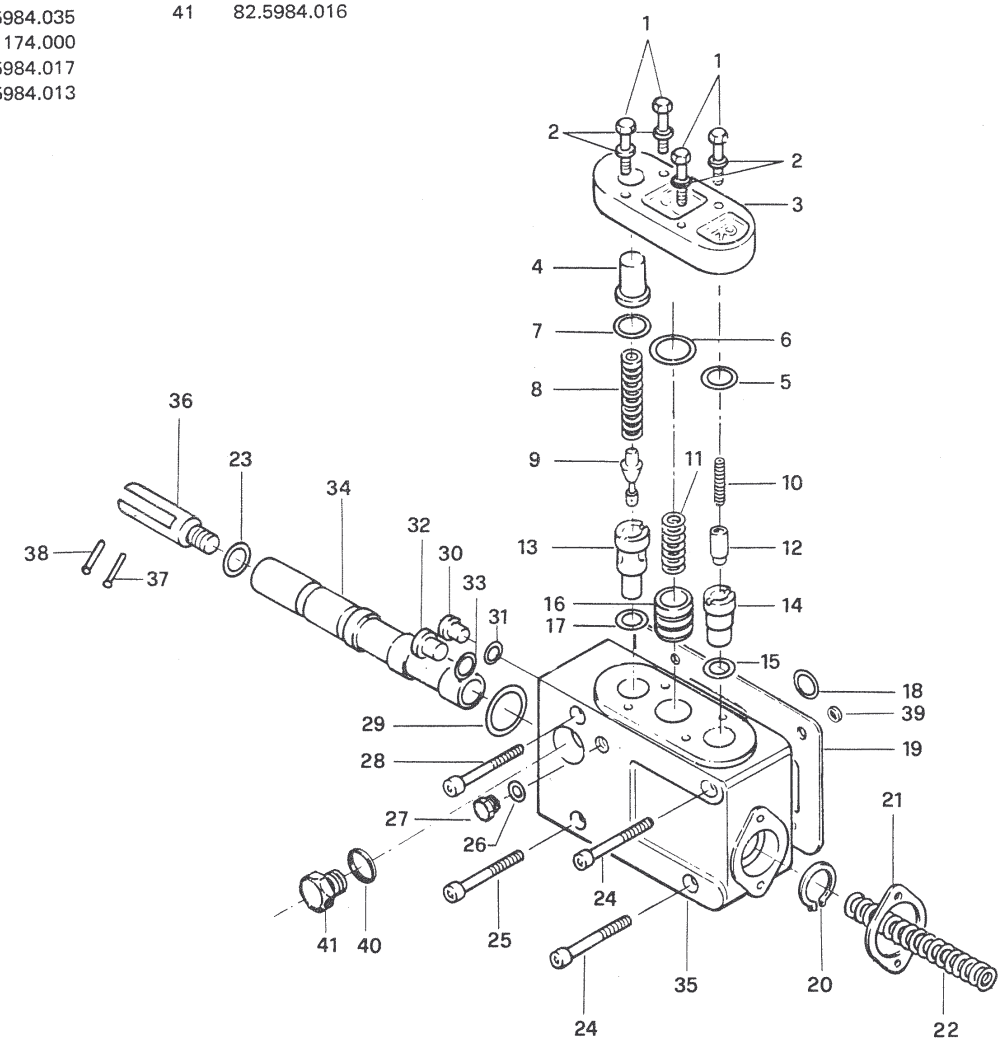

T.P.S. 4-330

Segnalazioni di validità
Usage code
Signalisations de validité
Gultigkeitsvermerk

▲ FORNIRE SOLO ACCOPPIATI
▲ *DELIVERED ONLY MATCHED*
▲ FOURNIS SEULEMENT COUPLIS
▲ *LIEFERN PAAREN*

H00532 | B

Downloaded from www.Manualslib.com manuals search engine

N1

	No. ORDIN.	
1	86.5030.010	86.5030.000
2	86.5030.020	
3	81.4747.000	
4	84.3992.050	
5	82.8029.020	828029 070
6	86.2095.000	
7	85.7004.000	
8	85.6146.000	

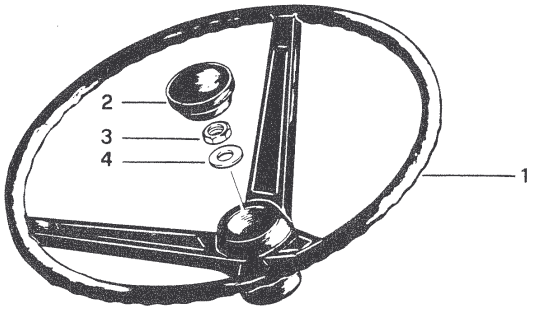

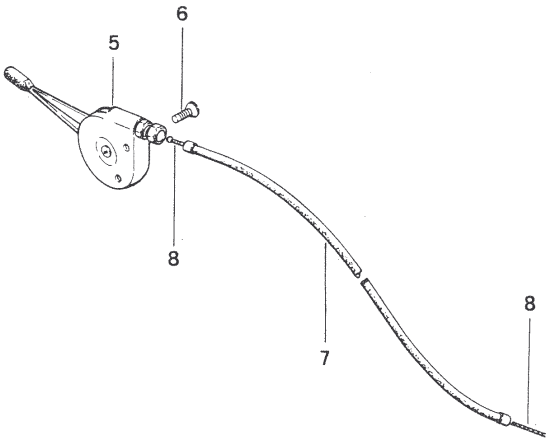

Downloaded from www.Manualslib.com manuals search engine